tyco Fire Protection Products

Worldwide Contacts | www.tyco-fire.com

Series TY-FRB, 5.6 K-factor Upright, Pendent, and Recessed Pendent Sprinklers Quick Response, Standard Coverage

General Description

The TYCO Series TY-FRB, 5.6 K-factor, Upright (TY313) and Pendent (TY323) Sprinklers described in this data sheet are quick response, standard coverage, decorative 3 mm glass bulb-type spray sprinklers designed for use in light or ordinary hazard, commercial occupancies such as banks, hotels, and shopping malls.

The recessed version of the Series TY-FRB Pendent Sprinkler, where applicable, is intended for use in areas with a finished ceiling. This recessed pendent sprinkler uses one of the following:

- A two-piece Style 15 Recessed Escutcheon with recessed adjustment up to 5/8 inch (15,9 mm) from the flush pendent position.
- A two-piece Style 20 Recessed Escutcheon with recessed adjustment up to 1/2 inch (12,7 mm) from the flush pendent position.

The adjustment provided by the Recessed Escutcheon reduces the accuracy to which the fixed pipe drops to the sprinklers must be cut.

Intermediate level versions of Series TY-FRB Sprinklers are described in Technical Data Sheet TFP357. Sprinkler guards and shields are described in Technical Data Sheet TFP780.

IMPORTANT

Always refer to Technical Data Sheet TFP700 for the "INSTALLER WARNING" that provides cautions with respect to handling and installation of sprinkler systems and components. Improper handling and installation can permanently damage a sprinkler system or its components and cause the sprinkler to fail to operate in a fire situation or cause it to operate prematurely.

NOTICE

The TYCO Series TY-FRB Sprinklers described herein must be installed and maintained in compliance with this document, as well as with the applicable standards of the National Fire Protection Association, in addition to the standards of any other authorities having jurisdiction. Failure to do so may impair the performance of these devices.

The owner is responsible for maintaining their fire protection system and devices in proper operating condition. The installing contractor or sprinkler manufacturer should be contacted with any questions.

Sprinkler Identification Number (SIN)

TY313 . . . . . Upright 5.6K, 1/2″ NPT
TY323 . . . . . Pendent 5.6K, 1/2″ NPT

Technical Data

Approvals
UL and C-UL Listed
FM, LPCB, and VdS Approved
CE Certified

Sprinklers with Polyester Finish are UL and C-UL Listed as Corrosion-Resistant Sprinklers.

Maximum Working Pressure
175 psi (12.1 bar)
250 psi (17.2 bar)*

* The maximum working pressure of 250 psi (17.2 bar) only applies to the listing by Underwriters Laboratories, Inc. (UL).

Discharge Coefficient
K=5.6 GPM/psi$^{1/2}$ (80,6 LPM/bar$^{1/2}$)

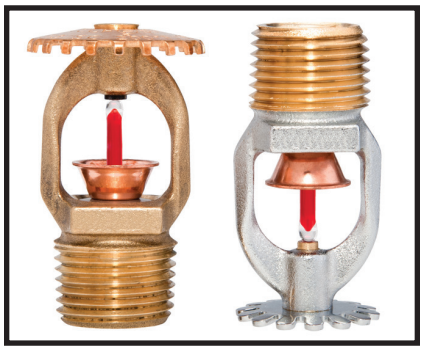

Temperature Rating
135°F (57°C)
155°F (68°C)
175°F (79°C)
200°F (93°C)
286°F (141°C)

Finishes
Sprinkler: Refer to Table A

Recessed Escutcheon: White Coated, Chrome Plated, or Brass Plated

Physical Characteristics
Frame . . . . . Bronze
Button. . . . . Brass/Copper
Sealing Assembly . . . . . Stainless Steel w/TEFLON
Bulb . . . . . .Glass
Compression Screw. . . . . Bronze
Deflector. . . . . Bronze

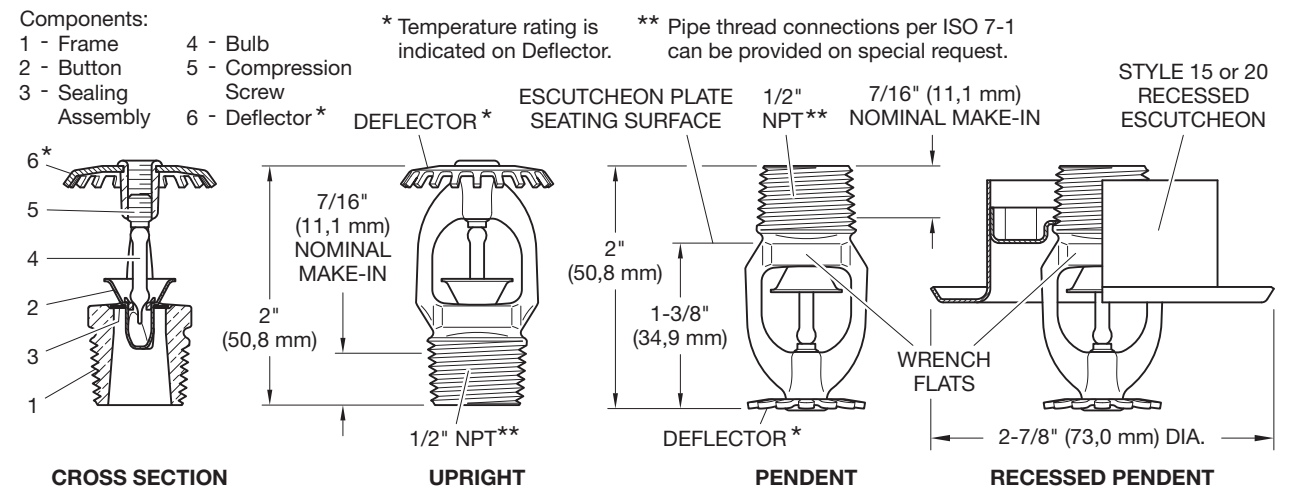

FIGURE 1
SERIES TY-FRB UPRIGHT (TY313) AND PENDENT (TY323) SPRINKLERS
5.6 K-FACTOR, 1/2 INCH NPT, QUICK RESPONSE

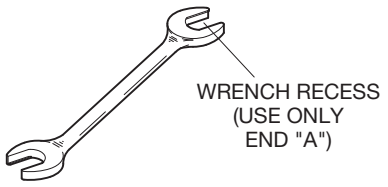

FIGURE 2
W-TYPE 6
SPRINKLER WRENCH

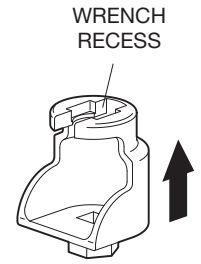

FIGURE 3
W-TYPE 7 RECESSED
SPRINKLER WRENCH

Operation

The glass bulb contains a fluid which expands when exposed to heat. When the rated temperature is reached, the fluid expands sufficiently to shatter the glass bulb, allowing the sprinkler to activate and water to flow.

Design Criteria

The TYCO Series TY-FRB, 5.6 K-factor, Upright (TY313) and Pendent (TY323) Sprinklers are intended for fire protection systems designed in accordance with the standard installation rules recognized by the applicable Listing or Approval agency (such as, UL Listing is based on the requirements of NFPA 13, and FM Approval is based on the requirements of FM's Loss Prevention Data Sheets). Only the Style 15 or Style 20 Recessed Escutcheon is to be used for recessed pendent installations.

Installation

The TYCO Series TY-FRB, 5.6 K-factor, Upright (TY313) and Pendent (TY323) Sprinklers must be installed in accordance with this section.

General Instructions
Do not install any bulb-type sprinkler if the bulb is cracked or there is a loss of liquid from the bulb. With the sprinkler held horizontally, a small air bubble should be present. The diameter of the air bubble is approximately 1/16 inch (1,6 mm) for the 135°F (57°C) and 3/32 inch (2,4 mm) for the 286°F (141°C) temperature ratings.

A leak-tight 1/2 inch NPT sprinkler joint should be obtained by applying a minimum to maximum torque of 7 to 14 ft.-lbs. (9,5 to 19,0 Nm). Higher levels of torque can distort the sprinkler Inlet with consequent leakage or impairment of the sprinkler.

Do not attempt to compensate for insufficient adjustment in the Escutcheon Plate by under- or over-tightening the sprinkler. Re-adjust the position of the sprinkler fitting to suit.

Upright and Pendent Sprinklers
The Series TY-FRB Upright and Pendent Sprinklers must be installed in accordance with the following instructions.

Step 1. Install Pendent sprinklers in the pendent position. Install upright sprinklers in the upright position.

Step 2. With pipe-thread sealant applied to the pipe threads, hand-tighten the sprinkler into the sprinkler fitting.

Step 3. Tighten the sprinkler into the sprinkler fitting using only the W-Type 6 Sprinkler Wrench (Figure 2). With reference to Figure 1, apply the W-Type 6 Sprinkler Wrench to the wrench flats. Torque sprinklers 7 to 14 ft.-lbs. (9,5 to 19,0 Nm).

Recessed Pendent Sprinklers
The Series TY-FRB Recessed Pendent Sprinklers must be installed in accordance with the following instructions.

Step A. After installing the Style 15 or Style 20 Mounting Plate over the sprinkler threads, and with pipe-thread sealant applied to the pipe threads, hand-tighten the sprinkler into the sprinkler fitting.

Step B. Tighten the sprinkler into the sprinkler fitting using only the W-Type 7 Recessed Sprinkler Wrench (Figure 3). With reference to Figure 1, apply the W-Type 7 Recessed Sprinkler Wrench to the sprinkler wrench flats. Torque sprinklers 7 to 14 ft.-lbs. (9,5 to 19,0 Nm).

Step C. After ceiling installation and finishing, slide on the Style 15 or Style 20 Closure over the Series TY-FRB Sprinkler and push the Closure over the Mounting Plate until its flange comes in contact with the ceiling.

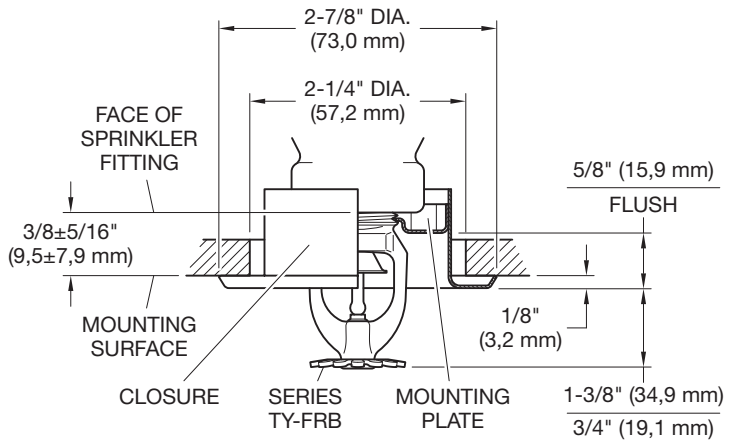

FIGURE 4
SERIES TY-FRB RECESSED PENDENT SPRINKLER ASSEMBLY (TY323) WITH TWO PIECE 5/8 INCH TOTAL ADJUSTMENT STYLE 15 RECESSED ESCUTCHEON

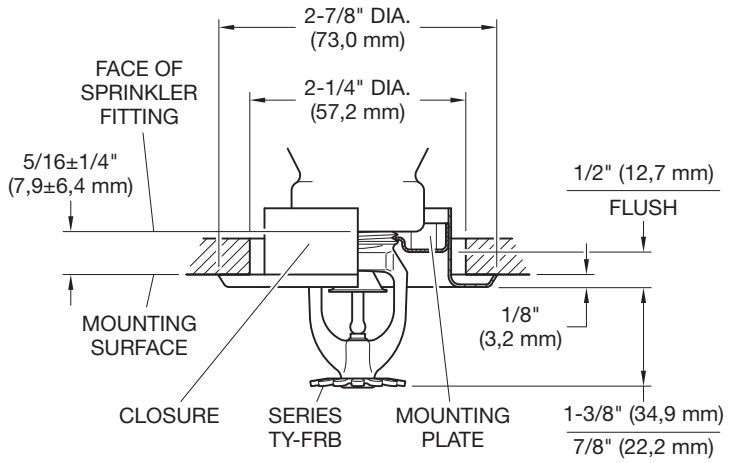

FIGURE 5
SERIES TY-FRB RECESSED PENDENT SPRINKLER ASSEMBLY (TY323) WITH TWO PIECE 1/2 INCH TOTAL ADJUSTMENT STYLE 20 RECESSED ESCUTCHEON

Care and Maintenance

The TYCO Series TY-FRB, 5.6 K-factor, Upright (TY313) and Pendent (TY323) Sprinklers must be maintained and serviced in accordance with this section.

Before closing a fire protection system main control valve for maintenance work on the fire protection system that it controls, obtain permission to shut down the affected fire protection systems from the proper authorities and notify all personnel who may be affected by this action.

Absence of the outer piece of an escutcheon, which is used to cover a clearance hole, can delay sprinkler operation in a fire situation.

The owner must assure that the sprinklers are not used for hanging any objects and that the sprinklers are only cleaned by means of gently dusting with a feather duster; otherwise, non-operation in the event of a fire or inadvertent operation may result.

Sprinklers which are found to be leaking or exhibiting visible signs of corrosion must be replaced.

Automatic sprinklers must never be painted, plated, coated, or otherwise altered after leaving the factory. Modified sprinklers must be replaced. Sprinklers that have been exposed to corrosive products of combustion, but have not operated, should be replaced if they cannot be completely cleaned by wiping the sprinkler with a cloth or by brushing it with a soft bristle brush.

Care must be exercised to avoid damage to the sprinklers before, during, and after installation. Sprinklers damaged by dropping, striking, wrench twist/slippage, or the like, must be replaced. Also, replace any sprinkler that has a cracked bulb or that has lost liquid from its bulb. (Ref. Installation Section.)

The owner is responsible for the inspection, testing, and maintenance of their fire protection system and devices in compliance with this document, as well as with the applicable standards of the National Fire Protection Association (e.g., NFPA 25), in addition to the standards of any other authorities having jurisdiction. Contact the installing contractor or sprinkler manufacturer regarding any questions.

Automatic sprinkler systems are recommended to be inspected, tested, and maintained by a qualified Inspection Service in accordance with local requirements and/or national codes.

P/N* 77 – XXX – X – XXX

		SIN
370	5.6K UPRIGHT (1/2″ NPT)	TY313
371	5.6K PENDENT (1/2″ NPT)	TY323

* Use suffix "I" for ISO 7-1 connection; for example, 77-370-4-175-I

	SPRINKLER FINISH
1	NATURAL BRASS
3	PURE WHITE (RAL9010)** POLYESTER
4	SIGNAL WHITE (RAL9003) POLYESTER
9	CHROME PLATED

** Eastern Hemisphere sales only

	TEMPERATURE RATINGS
135	135°F (57°C)
155	155°F (68°C)
175	175°F (79°C)
200	200°F (93°C)
286	286°F (141°C)

TABLE A
SERIES TY-FRB UPRIGHT AND PENDENT SPRINKLERS
PART NUMBER SELECTION

Limited Warranty

For warranty terms and conditions, visit www.tyco-fire.com.

Ordering Procedure

Contact your local distributor for availability. When placing an order, indicate the full product name and Part Number (P/N).

Sprinkler Assemblies with NPT Thread Connections
Specify: Series TY-FRB Upright or Pendent (specify) Sprinkler, SIN (specify), K=5.6, Quick Response, (specify) temperature rating, (specify) finish, P/N (specify, refer to Table A).

Recessed Escutcheon
Specify: Style 15 Recessed Escutcheon with (specify*) finish, P/N (specify*)

Specify: Style 20 Recessed Escutcheon with (specify*) finish, P/N (specify*)

* Refer to Technical Data Sheet TFP770

Sprinkler Wrench
Specify: W-Type 6 Sprinkler Wrench, P/N 56-000-6-387

Specify: W-Type 7 Sprinkler Wrench, P/N 56-850-4-001

GLOBAL HEADQUARTERS | 1400 Pennbrook Parkway, Lansdale, PA 19446 | Telephone +1-215-362-0700

Copyright © 2014 Tyco Fire Products, LP. All rights reserved.
TEFLON is trademark of The DuPont Corporation.

tyco Fire Protection Products

Worldwide Contacts | www.tyco-fire.com

Series RFII — 5.6 K-factor "Royal Flush II" Concealed Pendent Sprinklers Quick & Standard Response, Standard Coverage

General Description

The TYCO Series RFII 5.6 K-factor, "Royal Flush II" Concealed Pendent Sprinklers Quick Response (3-mm bulb) and Standard Response (5-mm bulb), are decorative sprinklers featuring a flat cover plate designed to conceal the sprinkler. These sprinklers are optimal for architecturally sensitive areas such as hotel lobbies, office buildings, churches, and restaurants.

Each sprinkler includes a Cover Plate/Retainer Assembly and a Sprinkler/Support Cup Assembly. The separable, two-piece assembly design provides the following benefits:

- Allows installation of the sprinklers and pressure testing of the fire protection system prior to installation of a suspended ceiling or application of the finish coating to a fixed ceiling.
- Permits the removal of suspended ceiling panels for access to building service equipment without having to first shut down the fire protection system and remove sprinklers.
- Provides for 1/2 in. (12,7 mm) of vertical adjustment to allow a measure of flexibility in determining the length of fixed piping to cut for the sprinkler drops.

IMPORTANT

Refer to Technical Data Sheet TFP2300 for warnings pertaining to regulatory and health information.

Always refer to Technical Data Sheet TFP700 for the "INSTALLER WARNING" that provides cautions with respect to handling and installation of sprinkler systems and components. Improper handling and installation can permanently damage a sprinkler system or its components and cause the sprinkler to fail to operate in a fire situation or cause it to operate prematurely.

The Series RFII Sprinklers are shipped with a Disposable Protective Cap. The Protective Cap is temporarily removed during installation and replaced to help protect the sprinkler during ceiling installation or finish. The tip of the Protective Cap can be used to mark the center of the ceiling hole into plaster board or ceiling tiles by gently pushing the ceiling product against the Protective Cap. When ceiling installation is complete, the Protective Cap is removed and the Cover Plate/Retainer Assembly is installed.

As an option, the Series RFII Standard Response (5-mm bulb) "Royal Flush II" Concealed Pendent Sprinklers can be fitted with a silicone Air and Dust Seal. See Figure 5. The Air and Dust Seal is intended for sensitive areas where it is desirable to prevent air and dust from the area above the ceiling to pass through the cover plate.

NOTICE

The Series RFII Concealed Pendent Sprinklers described herein must be installed and maintained in compliance with this document and with the applicable standards of the NATIONAL FIRE PROTECTION ASSOCIATION (NFPA), in addition to the standards of any authorities having jurisdiction. Failure to do so may impair the performance of these devices.

The owner is responsible for maintaining their fire protection system and devices in proper operating condition. The installing contractor or sprinkler manufacturer should be contacted with any questions.

Sprinkler Identification Number (SIN)

TY3531 — 3 mm bulb
TY3551 — 5 mm bulb

Technical Data

Sprinkler Approvals
Approvals apply only to the service conditions indicated in the Design Criteria section.

- TY3531 (3 mm Bulb) is UL Listed, C-UL Listed and NYC Approved (MEA 353-01-E) as Quick Response.
- TY3531 (3 mm Bulb) is VdS Approved (Certificate No. G4090007).
- TY3531 (3 mm Bulb) is FM and LPCB Approved (Ref. No. 094a/10) as Standard Response.

  Note: *FM and LPCB do not approve concealed sprinklers for quick response.*
- TY3551 (5 mm Bulb) is UL Listed, C-UL Listed, FM Approved, LPCB Approved (Ref. No. 094a/9), and NYC Approved (MEA 353-01-E) as Standard Response.

Approvals for Air and Dust Seal
UL and C-UL Listed for use with the RFII Standard Response Concealed Sprinkler (TY3551)

Maximum Working Pressure
Maximum 250 psi (17,3 bar) by UL, C-UL, and NYC

Maximum 175 psi (12,1 bar) by FM, VdS, and LPCB

Temperature Rating
155°F (68°C) Sprinkler with 139°F (59°C) Cover Plate

200°F (93°C) Sprinkler with 165°F (74°C) Cover Plate

Discharge Coefficient
K= 5.6 GPM/psi$^{1/2}$ (80,6 LPM/bar$^{1/2}$)

Adjustment
1/2 in. (12,7 mm)

Finishes
See the Ordering Procedure section.

Physical Characteristics

Frame	Bronze
Support Cup	Plated Steel
Guide Pins	Stainless Steel
Deflector	Bronze
Compression Screw	Brass
Bulb	Glass
Cap	Bronze or Copper
Sealing Assembly	Beryllium Nickel w/TEFLON
Cover Plate	Brass
Retainer	Brass
Ejection Spring	Stainless Steel

Design Criteria

The TYCO Series RFII 5.6 K-factor, "Royal Flush II" Concealed Pendent Sprinklers are intended for fire protection systems designed in accordance with the standard installation rules recognized by the applicable Listing or Approval agency; for example, UL Listing is based on NFPA 13 and VdS Approval is based on the CEA 4001.

For more information on LPCB and VdS Approvals, contact Johnson Controls at the following office:

Enschede, Netherlands
Telephone: 31-53-428-4444
Fax: 31-53-428-3377

The Series RFII Concealed Pendent Sprinklers are only listed and approved with the Series RFII Concealed Cover Plates having a factory applied finish.

NOTICE

Do not use the Series RFII in applications where the air pressure above the ceiling is greater than that below. Down drafts through the Sprinkler/Support Cup Assembly can delay sprinkler operation in a fire situation.

Operation

When exposed to heat from a fire, the Cover Plate, normally soldered to the Retainer at three points, falls away to expose the Sprinkler/Support Cup Assembly.

The Deflector — supported by the Guide Pins — then drops down to its operational position.

The glass bulb contains a fluid that expands when exposed to heat. When the rated temperature is reached, the fluid expands sufficiently to shatter the glass bulb, activating the sprinkler and allowing water to flow.

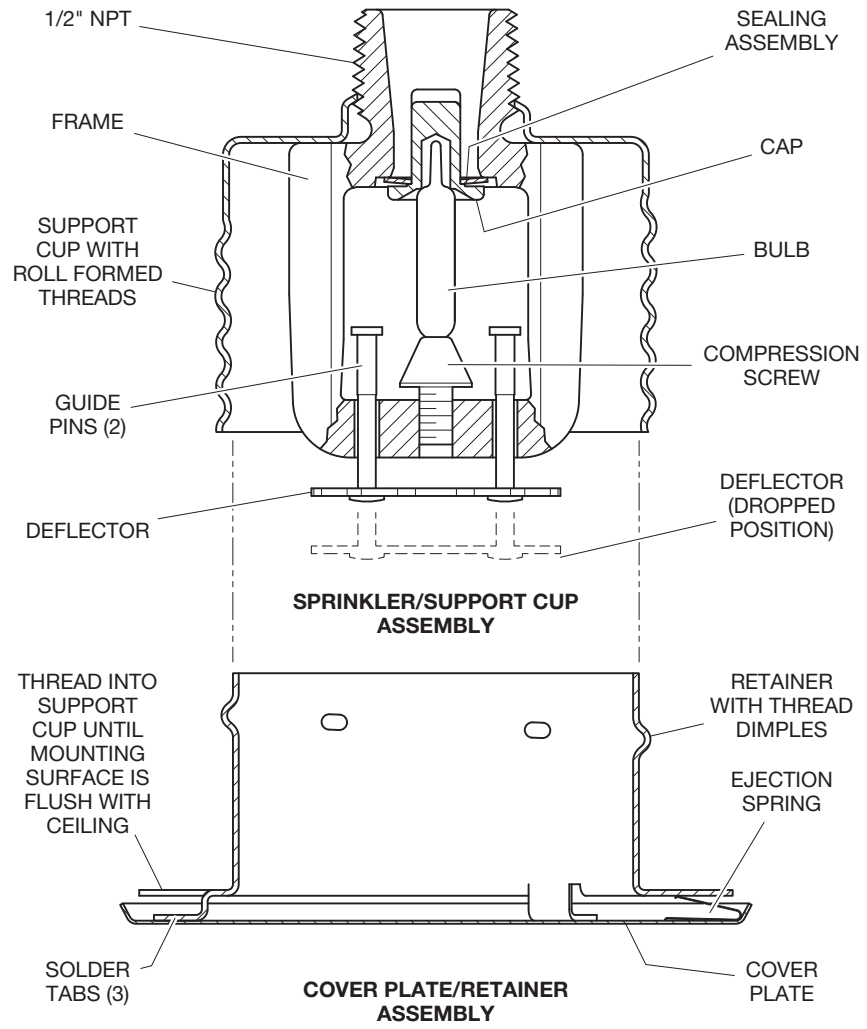

FIGURE 1
MODEL RFII CONCEALED SPRINKLER ASSEMBLY

Installation

The TYCO Series RFII 5.6 K-factor, "Royal Flush II" Concealed Pendent Sprinklers must be installed in accordance with this section.

General Instructions
Do not install any bulb-type sprinkler if the bulb is cracked or there is a loss of liquid from the bulb. With the sprinkler held horizontally, a small air bubble should be present. The diameter of the air bubble is approximately 1/16 in. (1,6 mm) for the 155°F (68°C) and 3/32 in. (2,4 mm) for the 200°F (93°C) temperature ratings.

A leak-tight 1/2 in. NPT sprinkler joint should be obtained by applying a minimum to maximum torque of 7 to 14 lb-ft (9,5 to 19,0 N·m). Higher levels of torque can distort the sprinkler Inlet with consequent leakage or impairment of the sprinkler.

Do not attempt to compensate for insufficient adjustment in the Sprinkler by under- or over-tightening the Sprinkler/Support Cup Assembly. Re-adjust the position of the sprinkler fitting to suit.

Step 1. Install the sprinkler only in the pendent position with the center-line of the sprinkler perpendicular to the mounting surface.

Step 2. Remove the Protective Cap.

Step 3. With pipe thread sealant applied to the pipe threads, hand-tighten the sprinkler into the sprinkler fitting.

Step 4. Wrench-tighten the sprinkler using only the RFII Sprinkler Wrench. See Figure 3. Apply the RFII Sprinkler Wrench to the Sprinkler as shown in Figure 3.

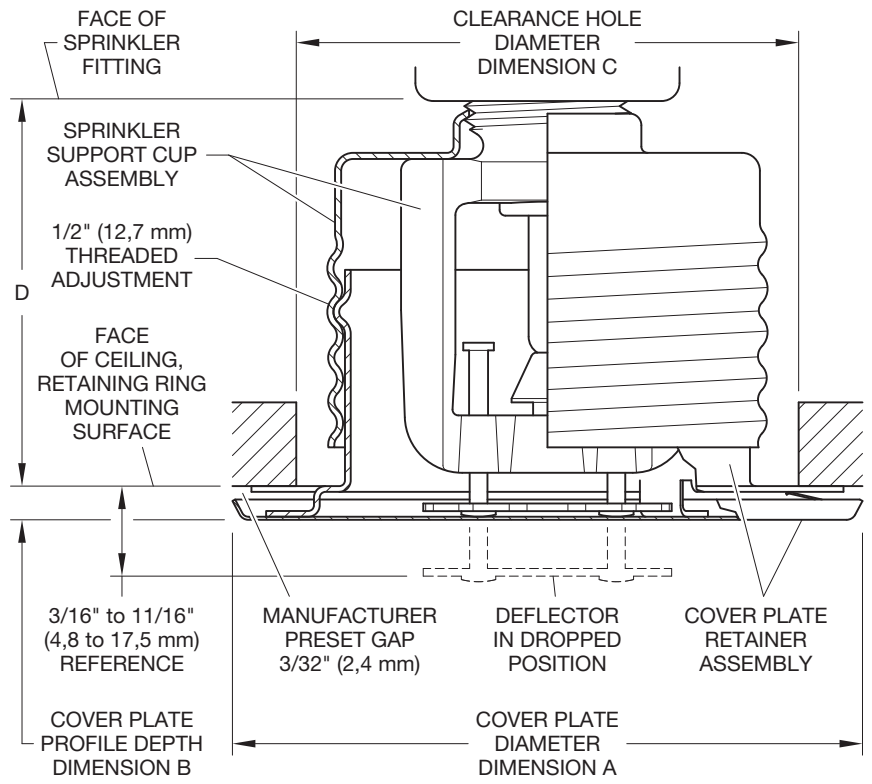

A: 3-1/4 in. (82,6 mm)
C: 2-3/8 to 2-5/8 in. (60,3 to 66,7 mm)
B: 3/16 in. (4,8 mm)
D: 1-3/4 to 2-1/4 in. (44,5 to 57,2 mm)

FIGURE 2
SERIES CONCEALED SPRINKLER INSTALLATION DIMENSIONS

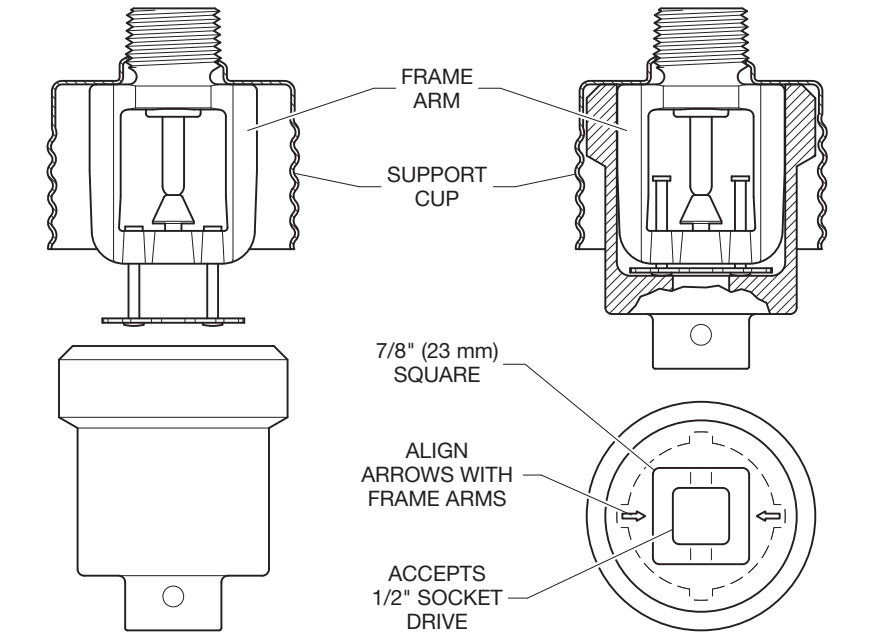

FIGURE 3
RFII SPRINKLER WRENCH

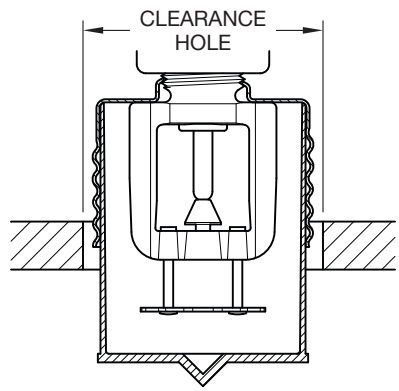

FIGURE 4
DISPOSABLE PROTECTIVE CAP

Step 5. Replace the Protective Cap by pushing it upwards until it bottoms out against the Support Cup. See Figure 4. The Protective Cap helps prevent damage to the Deflector and Arms during ceiling installation and/or finish. You can also use the Protective Cap to locate the center of the clearance hole by gently pushing the ceiling material up against the center point of the Protective Cap.

NOTICE

As long as the Protective Cap remains in place, the system is considered "Out of Service".

Step 6. After the ceiling has been completed with the 2-1/2 in. (63,5 mm) diameter clearance hole and in preparation for installing the Cover Plate/Retainer Assembly, remove and discard the Protective Cap. Verify that the Deflector moves up and down freely.

If the Sprinkler is damaged and the Deflector does not move up and down freely, replace the entire Sprinkler. Do not attempt to modify or repair a damaged sprinkler.

Step 7. When installing an Air and Dust Seal, see Figure 5; otherwise, proceed to Step 8. To attach the Air and Dust Seal, verify the angle of the outside edge of the seal is oriented according to Figure 5. Start the edge of the Retainer in the grooved slot of the Air and Dust Seal and continue around the retainer until the entire Air and Dust Seal is engaged.

Step 8. Screw on the Cover Plate/Retainer Assembly until the Retainer, shown in Figure 2, or the Air and Dust Seal, shown in Figure 5, contacts the ceiling. Do not continue to screw on the Cover Plate/Retainer Assembly so that it lifts a ceiling panel out of its normal position. If you cannot engage the Cover Plate/Retainer Assembly with the Support Cup or you cannot engage the Cover Plate/Retainer Assembly sufficiently to contact the ceiling, you must reposition the Sprinkler Fitting.

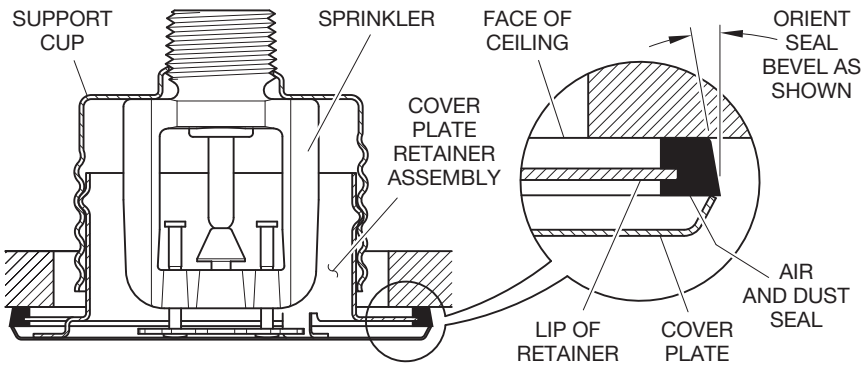

FIGURE 5
OPTIONAL AIR AND DUST SEAL FOR SERIES RFII (TY3551)

Care and Maintenance

The TYCO Series RFII 5.6 K-factor, "Royal Flush II" Concealed Pendent Sprinklers must be maintained and serviced in accordance with this section.

Before closing a fire protection system main control valve for maintenance work on the fire protection system that it controls, obtain permission to shut down the affected fire protection system from the proper authorities and notify all personnel who may be affected by this action.

Absence of the Cover Plate/Retainer Assembly can delay sprinkler operation in a fire situation.

When properly installed, there is a nominal 3/32 in. (2,4 mm) air gap between the lip of the Cover Plate and the ceiling, as shown in Figure 2.

This air gap is necessary for proper operation of the sprinkler. If the ceiling requires repainting after sprinkler installation, ensure that the new paint does not seal off any of the air gap.

Do not pull the Cover Plate relative to the Enclosure. Separation may result.

Sprinklers which are found to be leaking or exhibiting visible signs of corrosion must be replaced.

Automatic sprinklers must never be painted, plated, coated, or otherwise altered after leaving the factory. Modified sprinklers must be replaced. Sprinklers that have been exposed to corrosive products of combustion, but have not operated, should be replaced if they cannot be completely cleaned by wiping the sprinkler with a cloth or by brushing it with a soft bristle brush.

Care must be exercised to avoid damage to the sprinklers - before, during, and after installation. Sprinklers damaged by dropping, striking, wrench twist/slippage, or the like, must be replaced. Also, replace any sprinkler that has a cracked bulb or that has lost liquid from its bulb. See the Installation Section.

Exercise care to avoid damage to sprinklers before, during, and after installation. Replace sprinklers damaged by dropping, striking, wrench twisting, wrench slipping, or the like. Also, replace any sprinkler that has a cracked bulb or that has lost liquid from its bulb. See the Installation section.

If you must remove a sprinkler, do not reinstall it or a replacement without reinstalling the Cover Plate/Retainer Assembly. If a Cover Plate/Retainer Assembly becomes dislodged during service, replace it immediately.

The owner is responsible for the inspection, testing, and maintenance of their fire protection system and devices in compliance with this document, as well as with the applicable standards of the NATIONAL FIRE PROTECTION ASSOCIATION such as NFPA 25, in addition to the standards of any other authorities having jurisdiction. Contact the installing contractor or sprinkler manufacturer regarding any questions.

Automatic sprinkler systems should be inspected, tested, and maintained by a qualified Inspection Service in accordance with local requirements and/or national code.

Limited Warranty

For warranty terms and conditions, visit www.tyco-fire.com.

Ordering Procedure

Contact your local distributor for availability. When placing an order, indicate the full product name.

Sprinkler/Support Cup Assembly
Specify: Series RFII (specify SIN), K=5.6, "Royal Flush II" Pendent Sprinklers (specify) temperature rating, P/N* (specify):

	155°F (68°C)	200°F (93°C)
TY3531	51-792-1-155	51-792-1-200
TY3551	51-790-1-155	51-790-1-200

* Use Suffix "I" for ISO 7-1 connection; for example, 51-792-1-155-I

Separately Ordered Cover Plate/ Retainer Assembly:
Specify: (temperature rating from below) Series RFII Concealed Cover Plate with (finish), P/N (specify).

	139°F (59°C)(a)	165°F (74°C)(b)
Grey White (RAL9002)	56-792-0-135	56-792-0-165
Brushed Brass	56-792-1-135	56-792-1-165
Brass	56-792-2-135	56-792-2-165
Pure White (c) (RAL9010)	56-792-3-135	56-792-3-165
Signal White (RAL9003)	56-792-4-135	56-792-4-165
Jet Black (RAL9005)	56-792-6-135	56-792-6-165
Brushed Chrome	56-792-8-135	56-792-8-165
Chrome	56-792-9-135	56-792-9-165
Custom	56-792-X-135	56-792-X-165

(a) For use with 155°F (68°C) sprinklers.
(b) For use with 200°F (93°C) sprinklers.
(c) Eastern Hemisphere sales only.

Sprinkler Wrench
Specify: RFII Sprinkler Wrench, P/N 56-000-1-075

Air and Dust Seal
Specify: Air and Dust Seal, P/N 56-908-1-001

1400 Pennbrook Parkway, Lansdale, PA 19446 | Telephone +1-215-362-0700

© 2020 Johnson Controls. All rights reserved. All specifications and other information shown were current as of document revision date and are subject to change without notice.

NATIONAL FIRE PROTECTION ASSOCIATION and NFPA are registered trademarks of National Fire Protection Association;
TEFLON is a registered trademark of DuPont

Johnson Controls

UCFT

UNLIMITED COMPANY FOR TRADE

UL/FM Certificates

+201050115843
+201121524436
Unlimited.company71@gmail.com
El bahr El Azzem St. - Giza - Egypt

ONLINE CERTIFICATIONS DIRECTORY

VNIV.EX5985
Sprinklers, Automatic and Open

Page Bottom

Sprinklers, Automatic and Open

See General Information for Sprinklers, Automatic and Open

TYCO FIRE & BUILDING PRODUCTS EX5985
1400 PENNBROOK PKWY
LANSDALE, PA 19446-3840 USA

Sprinkler Identification Numbers (SIN) TY1121, TY1221, TY1281, TY1282, TY1381, TY1382, TY3101, TY3103, TY3121, TY3123, TY3210, TY3221, TY3281, TY3282, TY3290, TY3301, TY3321, TY3322, TY3381, TY3382, TY3390, TY4101, TY4103, TY4121, TY4123, TY4210, TY4321, TY4322, TY4801, TY4910, TY9128 Fusible Element Type.

Sprinkler Identification Numbers (SIN) TY313, TY315, TY323, TY325, TY363, TY365, TY1131, TY1151, TY1231, TY1251, TY1331, TY2131, TY2231, TY3104, TY3131, TY3133, TY3151, TY3153, TY3187, TY3191, TY3201, TY3230, TY3231, TY3250, TY3251, TY3291,TY3296, TY3331, TY3332, TY3351, TY3391, TY3431, TY3451, TY3535, TY3539, TY3555, TY3631, TY3651, TY4131, TY4133, TY4151, TY4153, TY4191, TY4231, TY4251, TY4292, TY4232, TY4332, TY4631, TY4651, TY4831, TY4851, TY4931, TY4951, TY5131, TY5137, TY5151, TY5153, TY5231, TY5237, TY5251, TY5332, TY5337, TY5339, TY5851, TY6137, TY6237, TY7103, TY7153, TY8181, TY8191, TY8281, TY8291, TY9181, TY9191, TY9281, TY9291 glass bulb type.

Sprinkler Identification Numbers (SIN) TY3111, TY3113, TY3211, TY3311, TY4113, TY4211, TY4811 and TY4911 are center strut type sprinklers. Chrome plated sprinklers are identified by an unplated area where the deflector is staked to the frame and/or unplated ends of the center strut. Telfon coated sprinklers are identified by the chrome plated operating mechanism.

Sprinkler Identification Numbers (SIN) TY3135, TY3155, TY3230, TY3235, TY3250, TY3255, TY3335, TY3337, TY3339, TY3355, TY3338, TY3357, TY3358, TY3735, TY3835, TY3935, TY5255, TY5235, TY5238, dry sprinkler glass bulb type.

Sprinkler Identification Numbers (SIN) TY3187, TY4180, TY4181, TY4182, TY2180, TY2181, TY2182 are plain brass glass bulb type attic sprinklers.

Sprinkler Identification Numbers (SIN) TY3180, TY3181, TY3182, TY3183, TY3184, TY3185, TY4522, TY5521, TY5522, TY9128 are fusible link type sprinklers.

Sprinkler Identification Numbers (SIN) TY1189, TY2189, TY2190, TY3189, TY3190, TY2199, TY3199 are plain brass glass bulb type quick response sprinklers for concealed spaces.

Sprinkler Identification Numbers (SIN) TY5111, TY5211, TY5811 are center strut type sprinklers.

SIN TY3261, fusible pellet type. Decorative chrome plated, white or black paint coated sprinklers are identified by uncoated levers.

Sprinkler Identification Numbers (SIN) SA1131, SA1132, SA1151, SA1152 glass bulb type.

UPRIGHT AND PENDENT STANDARD SPRAY SPRINKLERS

NOMINAL 5.6 K-FACTOR

SIN	Response Type	Type	System Working Pressure, psig	Temp Rating, °F
TY313	QR	Upright	250	135, 155, 175, 200, 286
TY315	SR	Upright	250	135, 155, 175, 200, 286, 360
TY323	QR	Pendent	250	135, 155, 175, 200, 286
TY325	SR	Pendent	250	135, 155, 175, 200, 286, 360
TY3231	QR	Pendent	250	135, 155, 175, 200, 286
TY3201	QR	Pendent	175	135, 155, 175, 200, 286
TY3221	QR	Pendent, Rec. Pendent	175	165, 212
TY3131	QR	Upright	250	135, 155, 175, 200, 286
TY3121	QR	Upright	175	165, 212
TY3211	SR	Pendent	175	135, 165, 212, 280, 360, 500

TY3251	SR	Pendent	250	135, 155, 175, 200, 286, 360, 500
TY3111	SR	Upright	175	135, 165, 212, 286, 360
TY3151	SR	Upright	250	135, 155, 175, 200, 286, 360, 500
TY3101	SR	Upright	175	135,165,212,280,360
TY3210	SR	Pendent	175	135,165,212,280,360
SA1131	QR	Pendent	175	155, 175, 200, 286
SA1132	QR	Upright	175	155, 175, 200, 286
SA1151	SR	Pendent	175	155, 175, 200, 286
SA1152	SR	Upright	175	155, 175, 200, 286
TY3296	SR	Pendent	175	400, 500
TY3191	SR	Upright	175	400, 500

NOMINAL 1.4 TO 4.2 K-FACTOR

SIN	Response Type	Type	Nom K-Factor	System Working Pressure, psig	Temp Rating, °F
TY1231	QR	Pendent	2.8	175	135, 155, 175, 200, 286
TY2231	QR	Pendent	4.2	175	135, 155, 175, 200, 286
TY1221	QR	Pendent, Rec. Pendent	2.8	175	165, 212
TY1131	QR	Upright	2.8	175	135, 155, 175, 200, 286
TY1121	QR	Upright	2.8	175	165, 212
TY2131	QR	Upright	4.2	175	135, 155, 175, 200, 286
TY1251	SR	Pendent	2.8	175	135, 155, 175, 200, 286, 360
TY1151	SR	Upright	2.8	175	135, 155, 175, 200, 286, 360

NOMINAL 8.0 K-FACTOR

SIN	Response Type	Type	Inlet Thread NPT	System Working Pressure, psig	Temp Rating, °F
TY4231	QR	Pendent	3/4	175	135, 155, 175, 200, 286
TY4131	QR	Upright	3/4	175	135, 155, 175, 200, 286
TY4121	QR	Upright	3/4	175	165, 212
TY4221	QR	Pendent	3/4	175	165, 212
TY4911	SR	Pendent	1/2	175	135, 165, 212, 286, 360
TY4211	SR	Pendent	3/4	175	135, 165, 212, 280, 286
TY4251	SR	Pendent	3/4	175	135, 155, 175, 200, 286, 360
TY4951	SR	Pendent	1/2, 3/4	175	135, 155, 175, 200, 286, 360
TY4811	SR	Upright	1/2	175	135, 165, 212, 280, 360
TY4111	SR	Upright	3/4	175	135, 165, 212, 280, 360
TY4151	SR	Upright	3/4	175	135, 155, 175, 200, 286, 360
TY4831	QR	Upright	1/2	175	135, 155, 175, 200, 286
TY4851	SR	Upright	1/2, 3/4	175	135, 155, 175, 200, 286, 360
TY4931	QR	Pendent	1/2	175	135, 155, 175, 200, 286
TY4101	SR	Upright	3/4	175	135, 165, 212, 280, 360
TY4801	SR	Upright	1/2	175	135, 165, 212, 280, 360

TY4210	SR	Upright	3/4	175	135, 165, 212, 280, 360
TY4910	SR	Upright	1/2	175	135, 165, 212, 280, 360
TY4292	SR	Pendent	3/4	175	400, 500
TY4191	SR	Upright	3/4	175	400, 500

STANDARD SIDEWALL SPRAY SPRINKLERS

SIN	Response Type	Type	Nom K-Factor	System Working Pressure, psig	Temp Rating, °F
TY1381+, ++	QR	Flush HSW	5.6	175	165
TY3331+, ++	QR	HSW	5.6	250	135, 155, 175, 200, 286
TY3321	QR	HSW	5.6	175	165, 212
TY3331+, ++	QR	Rec. HSW	5.6	250	135, 155, 175, 200
TY3431	QR	VSW	5.6	175	135, 155, 175, 200, 286
TY3311	SR	HSW	5.6	175	135, 165, 212, 280, 360
TY3351+, ++	SR	HSW	5.6	250	135, 155, 175, 200, 286, 360
TY3351+, ++	SR	Rec. HSW	5.6	250	135, 155, 175, 200
TY3381+, ++	QR	Flush HSW	5.6	175	165
TY3390+, ++	SR	Flush HSW	5.6	175	140
TY3390	SR	Flush HSW	5.6	175	165
TY3391+, ++	QR	Flush HSW	5.6	175	135, 155, 175, 200
TY3451	SR	VSW	5.6	175	135, 155, 175, 200, 286, 360
TY3301	SR	HSW	5.6	175	135, 165, 212, 280, 360

+ Ordinary hazard occupancies.

++ Installation 4 to 12 in. below the ceiling.

FLUSH, RECESSED AND CONCEALED SPRINKLERS

SIN	Response Type	Type	Nom K-Factor	System Working Pressure, psig	Temp Rating, °F	
					Cover	Sprinkler
TY1281	QR	Flush Pendent	5.6	175	—	165
TY323	QR	Rec. Pendent	5.6	250	—	135, 155, 175, 200
TY325	SR	Rec. Pendent	5.6	250	—	135, 155, 175, 200
TY3531	QR	Concealed	5.6	250	139, 165	155, 200
TY3281	QR	Flush Pendent	5.6	175	—	165
TY3291	QR	Flush Pendent	5.6	175	—	135, 155, 175, 200
TY1231	QR	Rec. Pendent	2.8	175	—	135, 155, 175, 200
TY3201	QR	Rec. Pendent	5.6	175	—	135, 155, 175, 200
TY3231	QR	Rec. Pendent	5.6	250	—	135, 155, 175, 200, 286
TY4231	QR	Rec. Pendent	8.0	175	—	135, 155, 175, 200, 286
TY3261	QR	Flush	5.6	175	—	162
TY3290	SR	Flush Pendent	5.6	175	—	140, 165, 212
TY3390	SR	Flush HSW	5.6	175	—	140, 165
TY1251	SR	Rec. Pendent	2.8	175	—	135, 155, 175, 200

TY3211	SR	Rec. Pendent	5.6	175	—	135, 165, 212, 280, 360
TY3251	SR	Rec. Pendent	5.6	250	—	135, 155, 175, 200, 286
TY4211	SR	Rec. Pendent	8.0	175	—	135, 165, 212, 280, 360
TY4951	SR	Rec. Pendent	8.0	175	—	135, 155, 175, 200
TY4251	SR	Rec. Pendent	8.0	175	—	135, 155, 175, 200, 286
TY3551	SR	Concealed	5.6	250	139, 165	155, 200
TY5521	QR	Concealed Pendent	11.2	175	139, 165	160, 212

DRY SPRINKLERS

SIN	Response Type	Type	Max Length, in.	System Working Pressure, psig	Nom K-Factor	Temp Rating, F
TY3535#	QR	Concealed	48	175	5.6	155, 200
TY3335*	QR	HSW	48	175	5.6	135, 155, 175, 200, 286
TY3235	QR	Pendent	48	175	5.6	135, 155, 175, 200, 286
TY5235	QR	Pendent	48	175	11.2	135, 155, 175, 200, 286
TY3235	QR	Rec. Pendent	48	175	5.6	135, 155, 175, 200, 286
TY5235	QR	Rec. Pendent	48	175	11.2	135, 155, 175, 200, 286
TY3135#	QR	Upright	48	175	5.6	135, 155, 175, 200, 286
TY3555	SR	Concealed	48	175	5.6	155, 200
TY3355*	SR	HSW	48	175	5.6	135, 155, 175, 200, 286, 360
TY3255	SR	Pendent	48	175	5.6	135, 155, 175, 200, 286, 360
TY5255	SR	Pendent	48	175	11.2	135, 155, 175, 200, 286, 360
TY3255	SR	Rec. Pendent	48	175	5.6	135, 155, 175, 200, 286
TY5255	SR	Rec. Pendent	48	175	11.2	135, 155, 175, 200, 286
TY3155	SR	Upright	48	175	5.6	135, 155, 175, 200, 286, 360
TY3230	QR	Pendent, Rec. Pendent	48	175	5.6	135, 155, 175, 200, 286
TY3250	SR	Pendent	48	175	5.6	135, 155, 175, 200, 286, 360
TY3250	SR	Rec. Pendent	48	175	5.6	135, 155, 175, 200, 286
TY3337	QR	Pendent, Rec. Pendent	48	175	5.6	135, 155, 175, 200, 286
TY3357*	SR	HSW	48	175	5.6	135, 155, 175, 200, 286, 360
TY3357*	SR	Rec. HSW	48	175	5.6	135, 155, 175, 200, 286
TY3735+	QR	HSW	48	175	5.6	135, 155, 175, 200, 286
TY3835+	QR	Upright	48	175	5.6	135, 155, 175, 200, 286
TY3935+	QR	Pendent	48	175	5.6	135, 155, 175, 200, 286
TY3935+	QR	Rec. Pendent	48	175	5.6	135, 155, 175, 200, 286

* For ordinary hazard occupancies when installed 4 to 12 in. below ceiling.

The 155°F sprinkler utilizes a 135°F coverplate and the 200°F sprinkler utilizes a 155°F coverplate

+ 3/4 in. NPT

CONVENTIONAL (OLD STYLE) SPRINKLERS

SIN	Response Type	Nom K-Factor	Temp Rating, °F

TY363	QR	5.6	135, 155, 175, 200, 286
TY365	SR	5.6	135, 155, 175, 200, 286
TY3631	QR	5.6	135, 155, 175, 200, 286
TY4631	QR	8.0	135, 155, 175, 200, 286
TY3651	SR	5.6	135, 155, 175, 200, 286, 360, 500
TY4651	SR	8.0	135, 155, 175, 200, 286, 360

STANDARD RESPONSE - (SR) - EXTENDED COVERAGE SPRINKLER - LIGHT HAZARD

SIN	Type	Max Width (A) Ft	Max Length (B) Ft	Min Flow GPM	Nom K-Factor	Distance Below Ceiling In.	Temp Rating, °F
TY3302	HSW, Rec. HSW	16	18	29	5.6	4 to 12	155, 200
TY3302	HSW, Rec. HSW	16	20	32	5.6	4 to 12	155, 200
TY3302	HSW	16	24	39	5.6	4 to 18	135
TY3332	HSW, Rec. HSW	16	20	32	5.6	4 to 6	155
TY3332	HSW, Rec. HSW	16	22	35	5.6	4 to 6	155, 175
TY4322	HSW	16	22	37	8.0	4 to 6	165
TY4322	HSW	16	24	44	8.0	4 to 6	165
TY4322	HSW	16	20	45	8.0	4 to 18	165
TY4332	HSW, Rec. HSW	16	20	33	8.0	4 to 12	135
TY4332	HSW, Rec. HSW	16	22	35	8.0	4 to 6	155, 175
TY4332	HSW, Rec. HSW	16	22	36	8.0	4 to 12	155, 175
TY4332	HSW, Rec. HSW	16	24	39	8.0	4 to 6	155, 175
TY4332	HSW, Rec. HSW	16	24	40	8.0	4 to 12	155, 175
TY3232	Pendent, Rec. pendent	20	20	40	5.6	—	155
TY5522*	Concealed Pendent	20	20	40	11.2	—	160, 212

Dimension of wall on which a sidewall sprinkler is installed.

(B) Dimension perpendicular to wall on which a sidewall sprinkler is installed.

* Utilizes A 135 or 165°F Coverplate.

QUICK RESPONSE - (QR) - EXTENDED COVERAGE SPRINKLERS - LIGHT HAZARD

SIN	Type	Max Width (A) Ft	Max Length (B) Ft	Min Flow GPM	System Working Pressure, psig	Nom K-Factor	Distance Below Ceiling In.	Temp Rating, °F
TY1282	Flush Pendent	16	16	26	175	5.6	—	165
TY1382	Flush HSW	16	16	26	175	5.6	4 to 12	165
TY3232	Pendent, Rec. pendent	16	16	26	175	5.6	—	135, 155
TY3232	Pendent, Rec. pendent	18	18	33	175	5.6	—	135, 155
TY3232	Pendent, Rec. pendent	20	20	40	175	5.6	—	135
TY3282	Flush Pendent	16	16	26	175	5.6	—	165
TY3382	Flush HSW	16	16	26	175	5.6	4 to 12	165
TY6237	Pendent	18	18	37	175	14.0	—	135, 155, 175, 200, 286
TY6237	Pendent	20	20	40	175	14.0	—	135, 155, 175,

								200, 286
TY6237	Rec. Pendent	18	18	37	175	14.0	—	135, 155, 175, 200
TY6237	Rec. Pendent	20	20	40	175	14.0	—	135, 155, 175, 200
TY5237	Pendent, Rec. pendent	16	16	30	175	11.2	—	135, 155, 175, 200, 286
TY5237	Pendent, Rec. pendent	18	18	33	175	11.2	—	135, 155, 175, 200, 286
TY5237	Pendent	20	20	40	175	11.2	—	135, 155, 175
TY5237	Rec. pendent	20	20	40	175	11.2	—	135, 175
TY3532*	Concealed	16	16	26	175	5.6	—	155, 200
TY3532*	Concealed	20	20	40	175	5.6	—	155, 200
TY3532*	Concealed	18	18	33	175	5.6	—	155, 200
TY4232	Pendent, Rec. Pendent	16	16	26	175	8.0	—	135
TY4232	Pendent	16	16	26	175	8.0	—	155
TY4232	Pendent, Rec. Pendent	18	18	33	175	8.0	—	135
TY4232	Pendent	18	18	33	175	8.0	—	155
TY4232	Pendent, Rec. Pendent	20	20	40	175	8.0	—	135
TY4232	Pendent	20	20	40	175	8.0	—	155
TY4332+	Concealed HSW	16	16	26	250	8.0	4 to12	155
TY3539*	Dry Concealed	16	16	26	175	175	—	155, 200
TY3539*	Dry Concealed	18	18	33	175	175	—	155, 200
TY3302	HSW, Rec. HSW	16	16	26	175	5.6	4 to 12	200
TY3302	HSW, Rec. HSW	16	16	26	175	5.6	4 to 18	135, 155
TY3302	HSW, Rec. HSW	16	18	29	175	5.6	4 to 18	135, 155
TY3302	HSW, Rec. HSW	16	20	32	175	5.6	4 to 18	135, 155
TY3302	HSW	16	22	36	175	5.6	4 to 18	135
TY3338, TY3339	Dry HSW	16	16	26	175	5.6	4 to 12	135, 155
TY3338, TY3339	Dry HSW	16	18	29	175	5.6	4 to 12	135, 155
TY3338, TY3339	Dry HSW	18	16	29	175	5.6	4 to 12	135, 155
TY3338, TY3339	Dry HSW	16	20	32	175	5.6	4 to 12	135, 155
TY3358	Dry HSW	16	16	26	175	5.6	4 to 12	135, 155
TY3358	Dry HSW	16	18	29	175	5.6	4 to 12	135, 155
TY3358	Dry HSW	16	20	32	175	5.6	4 to 12	135, 155
TY3358	Dry HSW	18	16	29	175	5.6	4 to 12	135, 155
TY5238	Dry Pendent	18	18	33	175	11.2	—	135, 155, 175, 200
TY5238	Dry Pendent, Rec. Pendent	16	16	30	175	11.2	—	135, 155, 175, 200
TY3322	HSW	16	16	29	175	5.6	4 to 12	165
TY3322	HSW	18	16	29	175	5.6	4 to 12	165
TY3322	HSW	16	20	33	175	5.6	4 to 12	165
TY4322	HSW	16	16	26	175	8.0	4 to 6	165

TY4322	HSW	16	18	29	175	8.0	4 to 6	165
TY4322	HSW	18	16	31	175	8.0	4 to 6	165
TY4322	HSW	18	18	33	175	8.0	4 to 6	165
TY4322	HSW	16	20	34	175	8.0	4 to 6	165
TY4322	HSW	20	16	35	175	8.0	4 to 6	165
TY4322	HSW	16	22	37	175	8.0	4 to 6	165
TY4322	HSW	16	18	38	175	8.0	4 to 18	165
TY3332	HSW, Rec. HSW	16	16	26	250	5.6	4 to 12	135, 155, 175
TY3332	HSW, Rec. HSW	16	18	29	250	5.6	4 to 12	135, 155, 175
TY3332	HSW, Rec. HSW	16	20	32	250	5.6	4 to 6	135, 155, 175
TY3332	HSW, Rec. HSW	16	22	35	250	5.6	4 to 6	135
TY4332	HSW, Rec. HSW	16	16	26	250	8.0	4 to 12	135, 155, 175
TY4332	HSW, Rec. HSW	16	18	29	250	8.0	4 to 12	135, 155, 175
TY4332	HSW, Rec. HSW	16	20	32	250	8.0	4 to 6	135
TY4332	HSW, Rec. HSW	16	20	33	250	8.0	4 to 12	135
TY4332	HSW, Rec. HSW	16	22	35	250	8.0	4 to 6	135
TY4332	HSW, Rec. HSW	16	22	36	250	8.0	4 to 12	135
TY4332	HSW, Rec. HSW	16	24	39	250	8.0	4 to 6	135
TY4332	HSW, Rec. HSW	16	24	40	250	8.0	4 to 12	135
TY4522+	Concealed HSW	14	22	31	175	8.0	4 to 6	160
TY4522+	Concealed HSW	14	22	36	175	8.0	6 to 12	160
TY4522+	Concealed HSW	14	24	34	175	8.0	4 to 6	160
TY4522+	Concealed HSW	14	24	38	175	8.0	6 to 12	160
TY4522+	Concealed HSW	16	16	26	175	8.0	4 to 6	160
TY4522+	Concealed HSW	16	16	27	175	8.0	6 to 12	160
TY4522+	Concealed HSW	16	18	29	175	8.0	4 to 12	160
TY4522+	Concealed HSW	16	20	32	175	8.0	4 to 12	160
TY4522+	Concealed HSW	16	22	36	175	8.0	4 to 12	160
TY4522+	Concealed HSW	16	24	39	175	8.0	4 to 12	160
TY4522+	Concealed HSW	18	18	33	175	8.0	4 to 12	160
TY4522+	Concealed HSW	18	20	36	175	8.0	4 to 12	160
TY4522+	Concealed HSW	18	22	40	175	8.0	4 to 12	160
TY5522*	Concealed Pendent	16	16	30	175	11.2	—	160, 212
TY5522*	Concealed Pendent	18	18	33	175	11.2	—	160, 212

* The 155 or 160°F sprinkler utilizes a 135°F coverplate and the 200 or 212°F sprinkler utilizes a 165°F coverplate.

+ Utilizes a 135°F coverplate.

Dimension of wall on which a sidewall sprinkler is installed.

(B) Dimension perpendicular to wall on which a sidewall sprinkler is installed.

STANDARD RESPONSE - (SR) - EXTENDED COVERAGE SPRINKLERS - ORDINARY HAZARD

SIN	Type	Max Width x Length FtxFt	Ordinary Hazard Group	Min Sprinkler Flow Rate GPM	Nom K-Factor	Temp Rating °F

TY5332	HSW	16x16	1	38	11.2	155, 200
TY5332	HSW	16x16	2	51	11.2	155, 200
TY5332	HSW	16x18	1	43	11.2	155, 200
TY5332	HSW	16x18	2	58	11.2	155, 200
TY5332	HSW	16x20	1	48	11.2	155, 200
TY5332	HSW	16x20	2	64	11.2	155, 200
TY5337	HSW	16x22	1	53	11.2	200
TY5337	HSW	16x22	2	71	11.2	200
TY5337	HSW	16x24	1	58	11.2	200
TY5337	HSW	16x24	2	77	11.2	200
TY5339	Dry HSW	16x16	1	38	11.2	155, 200
TY5339	Dry HSW	16x16	2	51	11.2	155, 200
TY5339	Dry HSW	16x18	1	43	11.2	155, 200
TY5339	Dry HSW	16x18	2	58	11.2	155, 200
TY5339	Dry HSW	16x20	1	48	11.2	155, 200
TY5339	Dry HSW	16x20	2	64	11.2	155, 200
TY5237+	Pendent, Rec. Pendent	16x16	1	39	11.2	135, 155, 175, 200, 286
TY5237+	Pendent, Rec. Pendent	16x16	2	51	11.2	135, 155, 175, 200, 286
TY5238	Pendent, Rec. Pendent	16x16	1	39	11.2	155, 175, 200, 286
TY5238+	Pendent, Rec. Pendent	16x16	2	51	11.2	155, 175, 200, 286
TY5237+	Pendent, Rec. Pendent	18x18	1	49	11.2	135, 155, 175, 200, 286
TY5237+	Pendent, Rec. Pendent	18x18	2	65	11.2	135, 155, 175, 200, 286
TY5237+	Pendent, Rec. Pendent	20x20	1	60	11.2	135, 155, 175, 200, 286
TY5237+	Pendent, Rec. Pendent	20x20	2	80	11.2	135, 155, 175, 200, 286
TY6237+	Pendent, Rec. Pendent	16x16	1	39	14.5	135, 155, 175, 200, 286
TY6237+	Pendent, Rec. Pendent	16x16	2	51	14.0	135, 155, 175, 200, 286
TY6237+	Pendent, Rec. Pendent	18x18	1	49	14.0	135, 155, 175, 200, 286
TY6237+	Pendent, Rec. Pendent	18x18	2	65	14.0	135, 155, 175, 200, 286
TY6237+	Pendent, Rec. Pendent	20x20	1	60	14.0	135, 155, 175, 200, 286
TY6237+	Pendent, Rec. Pendent	20x20	2	80	14.0	135, 155, 175, 200, 286
TY5137+	Upright	16x16	1	39	11.2	135, 155, 175, 200, 286
TY5137+	Upright	16x16	2	51	11.2	135, 155, 175, 200, 286
TY5137+	Upright	18x18	1	49	11.2	135, 155, 175, 200, 286

TY5137+	Upright	18x18	2	65	11.2	135, 155, 175, 200, 286
TY5137+	Upright	20x20	1	60	11.2	135, 155, 175, 200, 286
TY5137+	Upright	20x20	2	80	11.2	135, 155, 175, 200, 286
TY6137+	Upright	16x16	1	39	14.5	135, 155, 175, 200, 286
TY6137+	Upright	16x16	2	51	14.5	135, 155, 175, 200, 286
TY6137+	Upright	18x18	1	49	14.5	135, 155, 175, 200, 286
TY6137+	Upright	18x18	2	65	14.5	135, 155, 175, 200, 286
TY6137+	Upright	20x20	1	60	14.5	135, 155, 175, 200, 286
TY6137+	Upright	20x20	2	80	14.5	135, 155, 175, 200, 286

+ Sprinklers are suitable for installation below noncombustible obstructed construction as described in NFPA 13-1999.

QUICK RESPONSE (QR) - EXTENDED COVERAGE SPRINKLERS - ORDINARY HAZARD

SIN	Type	Max Width x Length Ft x Ft	Ordinary Hazard Group	Min Sprinkler Flow Rate GPM	Nom K-Factor	Temp Rating, °F
TY5137	Upright	14 x 14	1	30	11.2	135, 155, 175, 200, 286
TY5137	Upright	14 x 14	2	39	11.2	135, 155, 175, 200, 286
TY5237+	Pendent, Rec. Pendent	14 x 14	1	30	11.2	135, 155, 175, 200, 286
TY5237+	Pendent, Rec. Pendent	14 x 14	2	39	11.2	135, 155, 175, 200, 286
TY5238	Pendent, Rec. Pendent	14 x 14	1	30	11.2	135, 155, 175, 200, 286
TY5238	Pendent, Rec. Pendent	14 x 14	2	39	11.2	135, 155, 175, 200, 286
TY6137	Upright	14 x 14	1	39	14.0	135, 155, 175, 200, 286
TY6137	Upright	14 x 14	2	51	14.0	135, 155, 175, 200, 286
TY6237	Pendent	14 x 14	1	39	14.0	135, 155, 175, 200, 286
TY6237	Pendent	14 x 14	2	51	14.0	135, 155, 175, 200, 286
TY6237	Rec. Pendent	14 x 14	1	39	14.0	135, 155, 175, 200
TY6237	Rec. Pendent	14 x 14	2	51	14.0	135, 155, 175, 200

+ Sprinklers are suitable for installation below noncombustible obstructed construction as described in NFPA 13-1999.

CORROSION RESISTANT SPRINKLERS

SIN	Type	Nom K-Factor	Coating Type	Temp Rating, °F
TY313	Upright	5.6	Polyester	135, 155, 175, 200, 286
TY323	Pendent	5.6	Polyester	135, 155, 175, 200, 286
TY315	Upright	5.6	Polyester	135, 155, 175, 200, 286
TY325	Pendent	5.6	Polyester	135, 155, 175, 200, 286
TY363	Conventional	5.6	Polyester	135, 155, 175, 200, 286
TY365	Conventional	5.6	Polyester	135, 155, 175, 200, 286

TY3631	Conventional	5.6	Polyester	135, 155, 175, 200 ,286
TY4631	Conventional	8.0	Polyester	135, 155, 175, 200, 286
TY3311	HSW	5.6	Lead	165, 212
TY3332	HSW	5.6	Polyester	135, 155, 175
TY4332	HSW	8.0	Polyester	135, 155, 175
TY3351	HSW	5.6	Polyester, lead	135, 155, 175, 200, 286, 360
TY3331	HSW	5.6	Polyester, lead	135, 155, 175, 200, 286
TY3311	HSW	5.6	Wax	165, 212
TY3311	HSW	5.6	Wax over lead	165, 212
TY3351	HSW	5.6	Wax, Wax over lead	135, 155, 175, 200
TY5332	HSW	11.2	Polyester	155, 200
TY5337	HSW	11.2	Polyester	155, 200
TY5131	Upright	11.2	Polyester	155, 200, 250, 286
TY5231	Pendent	11.2	Polyester	155, 200, 250, 286
TY3211	Pendent	5.6	Lead	165, 212
TY3251	Pendent	5.6	Polyester, lead	135, 155, 175, 200, 286, 360
TY3231	Pendent	5.6	Polyester, lead	135, 155, 175, 200, 286
TY3211	Pendent	5.6	Wax	165, 212
TY3211	Pendent	5.6	Wax over lead	165, 212
TY3251	Pendent	5.6	Wax, Wax over lead	135, 155, 175, 200
TY4911	Pendent	8.0	Lead	165, 212
TY4211	Pendent	8.0	Lead	165, 212
TY4251	Pendent	8.0	Polyester, lead	135, 155, 175, 200, 286, 360
TY4231	Pendent	8.0	Polyester, lead	135, 155, 175, 200, 286
TY4911	Pendent	8.0	Wax	165, 212
TY4211	Pendent	8.0	Wax	165, 212
TY4911	Pendent	8.0	Wax over lead	165, 212
TY4211	Pendent	8.0	Wax over lead	165, 212
TY4251	Pendent	8.0	Wax, Wax over lead	135, 155, 175, 200
TY5237	Pendent	11.2	Lead	135, 155, 175, 200, 286
TY5237	Pendent	11.2	Polyester	135, 155, 175, 200, 286
TY6237	Pendent	14	Lead	135, 155, 175, 200, 286
TY6237	Pendent	14	Polyester	135, 155, 175, 200, 286
TY7251	Pendent	16.8	Polyester	155, 200, 286
TY3111	Upright	5.6	Lead	165, 212
TY3133	Upright	5.6	Lead	135, 155, 175, 200, 286
TY3153	Upright	5.6	Lead	135, 155, 175, 200, 286, 360
TY3151	Upright	5.6	Polyester, lead	135, 155, 175, 200, 286, 360
TY3131	Upright	5.6	Polyester, lead	135, 155, 175, 200, 286
TY3111	Upright	5.6	Wax	165, 212
TY3111	Upright	5.6	Wax over lead	165, 212

TY3151	Upright	5.6	Wax, Wax over lead	135, 155, 175, 200
TY4811	Upright	8.0	Lead	165, 212
TY4111	Upright	8.0	Lead	165, 212
TY4133	Upright	8.0	Lead	135, 155, 175, 200, 286
TY4153	Upright	8.0	Lead	135, 155, 175, 200, 286, 360
TY4151	Upright	8.0	Polyester, lead	135, 155, 175, 200, 286, 360
TY4131	Upright	8.0	Polyester, lead	135, 155, 175, 200, 286
TY4811	Upright	8.0	Wax	165, 212
TY4111	Upright	8.0	Wax	165, 212
TY4811	Upright	8.0	Wax over lead	165, 212
TY4111	Upright	8.0	Wax over lead	165, 212
TY4151	Upright	8.0	Wax, Wax over lead	135, 155, 175, 200
TY5137	Upright	11.2	Lead	135, 155, 175, 200, 286
TY5137	Upright	11.2	Polyester	135, 155, 175, 200, 286
TY6137	Upright	14	Lead	135, 155, 175, 200, 286
TY6137	Upright	14	Polyester	135, 155, 175, 200, 286
TY7151	Upright	16.8	Polyester	155, 200, 286
TY3431	VSW	5.6	Polyester, lead	135, 155, 175, 200, 286
TY3451	VSW	5.6	Polyester, lead	135, 155, 175, 200, 286, 360
TY3451	VSW	5.6	Wax, Wax over lead	135, 155, 175, 200
TY9281	Pendent	8.0	Stainless Steel	135, 155, 175, 200, 286
TY8181	Upright	5.6	Stainless Steel	135, 155, 175, 200, 286
TY8281	Pendent	5.6	Stainless Steel	135, 155, 175, 200, 286
TY9181	Upright	8.0	Stainless Steel	135, 155, 175, 200, 286
TY8291	Pendent	5.6	Stainless Steel	135, 155, 175, 200, 286, 360, 500
TY8191	Upright	5.6	Stainless Steel	135, 155, 175, 200, 286, 360, 500
TY9291	Pendent	8.0	Stainless Steel	135, 155, 175, 200, 286, 360, 500
TY9191	Upright	8.0	Stainless Steel	135, 155, 175, 200, 286, 360, 500
TY3230	Pendent	5.6	Stainless Steel	135, 155, 175, 200, 286
TY3250	Pendent	5.6	Stainless Steel	135, 155, 175, 200, 286, 360
TY3337	HSW	5.6	Stainless Steel	135, 155, 175, 200, 286
TY3357	HSW	5.6	Stainless Steel	135, 155, 175, 200, 286, 360
TY3339	HSW	5.6	Stainless Steel	135, 155, 175, 200, 286
TY3296	Pendent	5.6	Lead	400, 500
TY4292	Pendent	8.0	Lead	400, 500
TY3191	Upright	5.6	Lead	400, 500
TY4191	Upright	8.0	Lead	400, 500

HIGH TEMPERATURE, WAX COATED SPRINKLERS

SIN	Type	Nom K-Factor	Max Ambient Temp, F	Sprinkler Temp Rating, F
TY3351	HSW	8.0	150	286

TY4251	Pendent	8.0	150	286
TY3251	Pendent	8.0	150	286
TY4151	Upright	8.0	150	286
TY3151	Upright	8.0	150	286
TY3451	VSW	8.0	150	286
TY9281	Pendent	8.0	150	286
TY8181	Upright	5.6	150	286
TY8281	Pendent	5.6	150	286
TY9181	Upright	8.0	150	286
TY8291	Pendent	5.6	150	286
TY8191	Upright	5.6	150	286
TY9291	Pendent	8.0	150	286
TY9191	Upright	8.0	150	286

INTERMEDIATE LEVEL SPRINKLERS

SIN*	Response Type	Type	Nom K-Factor	Temp Rating, °F
TY313	QR	Upright	5.6	135, 155, 175, 200, 286
TY315	SR	Upright	5.6	135, 155, 175, 200, 286
TY323	QR	Pendent	5.6	135, 155, 175, 200, 286
TY325	SR	Pendent	5.6	135, 155, 175, 200, 286
TY3231	QR	Pendent	5.6	135, 155, 175, 200, 286
TY3221	QR	Pendent	5.6	165
TY4231	QR	Pendent	8.0	135, 155, 175, 200, 286
TY4221	QR	Pendent	8.0	165
TY3133	QR	Upright	5.6	135, 155, 175, 200, 286
TY3123	QR	Upright	5.6	165
TY4133	QR	Upright	8.0	135, 155, 175, 200, 286
TY4123	QR	Upright	8.0	165
TY3251	SR	Pendent	5.6	135, 155, 175, 200, 286, 360
TY4251	SR	Pendent	8.0	135, 155, 175, 200, 286, 360
TY3113	SR	Upright	5.6	135, 165, 212, 280, 360
TY3153	SR	Upright	5.6	135, 155, 175, 200, 286, 360
TY4111	SR	Upright	8.0	135, 165, 212, 280, 360
TY4113	SR	Upright	8.0	135, 165, 212, 280, 360
TY4153	SR	Upright	8.0	135, 155, 175, 200, 286, 360
TY4211	SR	Upright	8.0	135, 165, 212, 280, 360
TY4210	SR	Pendent	8.0	135, 165, 212, 280, 360
TY3210	SR	Pendent	5.6	135, 165, 212, 280, 360
TY3211	SR	Pendent	5.6	135, 165, 212, 280, 360
TY3103	SR	Upright	5.6	135, 165, 212, 280, 360
TY4103	SR	Upright	8.0	135, 165, 212, 280, 360

* These sprinklers are available with or without sprinkler guards Models G1 and G4 as covered under File MS26602.

SPRINKLERS FOR STORAGE PROTECTION (CONTROL MODE DENSITY AREA)

SIN	Response Type	Type	Nom K-Factor	Temp Rating, °F
TY5231	QR	Pendent	11.2	155, 200, 286
TY5131	QR	Upright	11.2	155, 200, 286
TY5111	SR	Pendent	11.2	165, 212, 286
TY5211	SR	Upright	11.2	165, 212, 286
TY5151	SR	Upright	11.2	155, 200, 286
TY5851	SR	Upright	11.2	155, 200, 286
TY5251	SR	Rec. Pendent, Pendent	11.2	155, 200, 286
TY7151	SR	Upright	16.8	155, 200, 286
TY7251	SR	Pendent	16.8	155, 200, 286

EXTENDED COVERAGE SPRINKLERS FOR STORAGE PROTECTION (CONTROL MODE DENSITY AREA)

SIN	Response Type	Max Width x Length Ft x Ft	Type	Nom K-Factor	Temp Rating, F
TY9128	SR	14 x 14	Upright	25.2	165, 212

These sprinklers have not been investigated for use as a Control Mode Specific Application (CMSA) sprinkler in accordance with Chapter 21 of NFPA 13.

SPRINKLERS FOR STORAGE PROTECTION (CONTROL MODE SPECIFIC APPLICATION)

SIN	Response Type	Type	Nom K-Factor	Temp Rating, °F
TY5153	SR	Upright	11.2	155, 200, 286
TY7103	SR	Upright	16.8	286
TY7153	SR	Upright	16.8	200

SPECIFIC APPLICATION SPRINKLERS

Attic Sprinklers

SIN	Response Type	Fire Risk	Roof Pitch (In./In.)	Max Width Ft	Max Length Ft	Min Flow Rate GPM	Nom K-Factor	Temp Rating, F
TY2180	QR	++	3/12 to 7/12	6	20	13	4.2	155
TY2180	QR	++	3/12 to 7/12	6	20	13	4.2	200
TY2181	QR	++	7/12 to 12/12	6	20	13	4.2	155
TY2181	QR	++	7/12 to 12/12	6	20	13	4.2	200
TY2182	QR	++	10/12 to 12/12	6	20	13	4.2	155
TY2182	QR	++	10/12 to 12/12	6	20	13	4.2	200
TY3180	QR	++	4/12 to 6/12	6	60	38	5.6	212
TY3180	QR	++	4/12 to 6/12	6	40	25	5.6	212
TY3181	QR	++	7/12 to 9/12	6	60	38	5.6	212
TY3181	QR	++	7/12 to 9/12	6	40	25	5.6	212

TY3182	QR	++	10/12 to 12/12	6	60	38	5.6	212
TY3182	QR	++	10/12 to 12/12	6	40	25	5.6	212
TY3183	QR	++	4/12 to 6/12	6	40	35	5.6	212
TY3183	QR	++	4/12 to 6/12	6	30	25	5.6	212
TY3184	QR	++	7/12 to 9/12	6	40	35	5.6	212
TY3184	QR	++	7/12 to 9/12	6	30	25	5.6	212
TY3185	QR	++	10/12 to 12/12	6	40	35	5.6	212
TY3185	QR	++	10/12 to 12/12	6	30	25	5.6	212
TY3187	QR	++	4/12 to 12/12	6	28	34	5.6	200
TY3187	QR	++	4/12 to 12/12	6	20	25	5.6	200
TY3183	QR	++	4/12 to 6/12	6	10	19	5.6	212
TY3184	QR	++	7/12 to 9/12	6	10	19	5.6	212
TY3185	QR	++	10/12 to 12/12	6	10	19	5.6	212
TY4180	QR	++	4/12 to 6/12	6	60	38	8.0	200
TY4181	QR	++	7/12 to 9/12	6	60	38	8.0	200
TY4182	QR	++	10/12 to 12/12	6	60	38	8.0	200

++ For protection of Light Hazard attic spaces of wood truss or open wood joist construction with saddle type roofs in buildings 20 to 60 ft in width and not exceeding a protection area of 400 sq ft per sprinkler when installed in accordance with the manufacturer' s installation and design parameter instructions.

Window Sprinklers

SIN	Response Type	Fire Risk	Type	Nom K-Factor	Distance Between Sprinklers, Ft	Min Flow Rate GPM	Temp Rating, F
TY3388	QR	*, %	HSW	5.6	6 to 8	20	155, 200
TY3388	QR	*, %	HSW	5.6	+	15	155, 200
TY3488	QR	*, %	VSW	5.6	6 to 8	20	155, 200
TY3488	QR	*, %	VSW	5.6	+	15	155, 200

+ Located between Mullions and not greater than 6 ft apart.

* For use on heat-strengthened or tempered glass windows without horizontal mullions having a maximum height of 13 ft. Combustibles must be maintained at a minimum distance of 2 in. from the glass. This may be accomplished by use of a 3 ft. pony wall or any other method acceptable to the authority having jurisdiction when installed in accordance with the manufacturer's installation and design parameter instructions.

% For use on UL certified FireLite Plus ceramic glass (by Technical Glass Products) without horizontal mullions having a maximum height of 8 ft. Combustibles are not required to be maintained at any minimum distance from the glass when the sprinklers are installed in accordance with the manufacturer's installation and design parameter instructions.

Authorities having jurisdiction shall be consulted to determine the hydraulic requirements for each installation.

Concealed Space Sprinklers

SIN	Response Type	Type	Height of Space, In.		Max Coverage Area, Ft^2	Nom K-Factor	Temp Rating, F
			Min	Max			
TY1189+	QR	Upright	12	36	100	2.8	175
TY1189++	QR	Upright	6*	54	100	2.8	175
TY2189+ **	QR	Upright	12	36	144	4.2	175
TY2189++ **	QR	Upright	6*	54	144	4.2	175
TY3189+ **	QR	Upright	12	36	144	5.6	175

TY3189++ **	QR	Upright	6*	54	144	5.6	175
TY2190%	QR	Upright	6	480	120	4.2	200
TY3190%	QR	Upright	6	480	120	5.6	200
TY2199+ **	QR	Upright	6*	84	196	4.2	200
TY2199++ **	QR	Upright	6*	84	196	4.2	200
TY3199+ **	QR	Upright	6*	84	256	5.6	200
TY3199++ **	QR	Upright	6*	84	256	5.6	200

* Minimum distance between upper and lower joists.

** Wet or Dry pipe systems using steel pipe.

+ For use in light hazard flat concealed spaces incorporating noncombustible or wood truss construction. The Manufacturers Installation and Design Parameter Instructions should be consulted for specific installation parameters, obstruction criteria and hydraulic design requirements.

++ For use in combustible solid wood and composite wood joist construction.

% For use in attic areas outside the scope of application for the BB, SD or HIP sprinklers.

Trademark and/or Tradename: "CSC"

Last Updated on 2017-08-21

Questions? Print this page Terms of Use Page Top

© 2017 UL LLC

The appearance of a company's name or product in this database does not in itself assure that products so identified have been manufactured under UL's Follow-Up Service. Only those products bearing the UL Mark should be considered to be Certified and covered under UL's Follow-Up Service. Always look for the Mark on the product.

UL permits the reproduction of the material contained in the Online Certification Directory subject to the following conditions: 1. The Guide Information, Assemblies, Constructions, Designs, Systems, and/or Certifications (files) must be presented in their entirety and in a non-misleading manner, without any manipulation of the data (or drawings). 2. The statement "Reprinted from the Online Certifications Directory with permission from UL" must appear adjacent to the extracted material. In addition, the reprinted material must include a copyright notice in the following format: "© 2017 UL LLC".

Non-Storage / Special Protection / Storage Sprinklers

General Information

Automatic sprinkler protection is recommended for industrial and other buildings having combustible construction or combustible occupancies.

When selecting a specific type of sprinkler, refer to the FM Global Property Loss Prevention Data Sheets to ensure that the sprinkler selected is capable of providing adequate fire protection for the intended occupancy. Projects that are specific to FM Global insured clients, working plans of proposed layouts, showing all details with respect to location of sprinklers and piping, description of the occupancy and details of construction, should be sent to the local FM Global engineering office for review and acceptance before the materials are fabricated. The plans will be accepted or changes will be recommended to assure that the work will be done according to the best practice and to avoid the possibility of later requests for changes.

Nominal thread sizes are expressed using American National Standard Taper Pipe Threads (NPT). Sprinklers intended for sale outside the United States shall have threads which are in compliance with other national or international standards as permitted at the sole discretion of FM Approvals.
Unless otherwise noted, automatic sprinklers have a rated working pressure of 175 psi (12.1 bar).

Sprinkler Categories

There are three categories of FM Approved automatic sprinklers: Storage, Non-Storage and Special Protection sprinklers based on the type of occupancy hazard they are intended to protect. Within these three categories are various different types of orientations (such as pendent, upright, horizontal sidewall, vertical sidewall, flush, recessed, concealed, dry pendent, dry upright, etc.), thermal response ratings (i.e. quick response or standard response), nominal temperature ratings (see table below), K-factors (see table below) and spacings (i.e. standard or extended coverage).

Nominal K-Factors of Sprinklers

The sprinkler nominal discharge coefficient (K-factor) is expressed in US customary units of gal/min/(psi)$^{0.5}$. See the table below for nominal K-factor values of currently Approved sprinklers.

Nominal K-Factors of Approved Sprinklers

Nominal K-Factor, gpm/(psi)$^{1/2}$	*Metric K-Factor, lpm/(bar)$^{1/2}$*
2.8	40
5.6	80
8.0	115
11.2	160
14.0	200
16.8	240
19.6	280
22.4	320
25.2	360

The following table provides the nominal K-factor values of currently Approved Special Protection (Residential) sprinklers.

Nominal K-Factors of Approved Special Protection (Residential) Sprinklers

Nominal K-Factor, gpm/(psi)$^{1/2}$	*Metric K-Factor, lpm/(bar)$^{1/2}$*
3.8	55
5.8	85
6.9	100

© 2007-2018 FM Approvals. All rights reserved.

Nominal Temperature Rating of Sprinklers

A sprinkler operates automatically when the heat-actuated element is heated to, or above, its thermal rating. Selection of the proper temperature rating for automatic sprinklers is important as it provides a factor of safety designed to prevent premature operation. See the table below as well as the occupancy-specific FM Global data sheet to ensure the proper nominal temperature rating for the sprinkler is chosen based on the hazard being protected as well as the expected ambient temperature conditions. Factory coated, plated and painted sprinklers rated above 165°F (74°C) have the standard temperature color code either on the frame arms or on the compression screws, except in the case of bulb type decorative coated sprinklers in which the bulb fluid color indicates the temperature rating per the following table:

Nominal Temperature Ratings of Sprinklers Based on Maximum Ambient Temperature at Sprinkler Level

*Nominal Temperature Rating of Sprinkler**	*Maximum Ambient Temperature at Sprinkler Level*	*Temperature Range of Nominal Rating***	*Temperature Classification of Sprinkler*	*Color of Sprinkler Frame*	*Color and Temperature of Sprinkler Glass Bulb*
135°F (55°C)	100°F (38°C)	135°F (57°C)	Ordinary	Unpainted	Orange, 135°F (57°C)
160°F (70°C)	100°F (38°C)	155°F - 165°F (68°C - 74°C)	Ordinary	Unpainted	Red, 155°F (68°C)
175°F (80°C)	150°F (66°C)	175°F (79°C)	Intermediate	White	Yellow, 175°F (79°C)
212°F (100°C)	150°F (66°C)	200°F - 220°F (93°C - 104°C)	Intermediate	White	Green, 200°F & 225°F (93°C & 107°C)
280°F (140°C)	225°F (107°C)	280°F - 286°F (138°C - 141°C)	High	Blue	Blue, 250°F & 286°F (121°C & 141°C)
350°F (175°C)	300°F (149°C)	325°F -375°F (163°C - 191°C)	Extra High	Red	Mauve, 325°F & 360°F (162°C & 182°C)
425°F (220°C)	375°F (191°C)	400°F -475°F (204°C - 246°C)	Very Extra High	Green	Black, 400°F - 650°F (204°C – 343°C)
525°F (275°C)	475°F (246°C)	500°F -575°F (260°C - 302°C)	Ultra High	Orange	Black, 400°F - 650°F (204°C – 343°C)
650°F (345°C)	625°F (329°C)	650°F (343°C)	Ultra High	Orange	Black, 400°F - 650°F (204°C – 343°C)

*The values indicated for nominal temperature ratings of sprinkler in this table are based on values indicated in FM Global data sheets

**The values indicated are based on the actual (marked or marked nominal) temperature ratings of currently Approved sprinklers

Sprinklers of "very extra high" and "ultra high" ratings are primarily used for internal protection of chambers such as ovens and dryers having working temperatures above 300°F (149°C). When the sprinklers are normally heated to the working temperature of the oven or dryer, under fire conditions they will operate fast enough for proper protection. However, when the sprinklers are initially at the same temperature as a cold oven or dryer, operation may be so severely retarded that the oven or dryer is virtually without internal sprinkler protection.

Nominal Response Rating of Sprinklers

© 2007-2018 FM Approvals. All rights reserved.

Approved sprinklers are listed in one of three ways for response ratings: fast response (FR), quick response (QR) or standard response (SR) and are reflective of the response of the entire sprinkler to thermal exposure, not just the thermal sensing element of the sprinkler. Note that fast response (FR) sprinklers are a subset of quick response sprinklers for listing purposes.

The thermal sensing elements of the sprinkler are identified as either Fusible or, in the case of bulb type elements, nominal bulb diameter in millimeters (e.g., 2.5 mm, 3 mm, etc.).

Finishes and Coatings of Sprinklers

Approved sprinklers are also available with factory-applied special coatings for resistance to corrosive environments; such sprinklers are listed under the Special Protection sprinkler category. For corrosion resistance, wax is satisfactory except in extreme atmospheres. Wax has too low a melting point for high temperate rated sprinklers, whereas a bituminous coating affords some protection. A lead coating protects against certain mild corrosive atmospheres. Wax-over-lead provides good sprinkler protection. Corrosion resistant sprinklers such as those manufactured from stainless steel or other corrosion resistant materials currently afford the best available protection. See the FM Global occupancy-specific data sheet to determine when a corrosion resistant sprinkler is needed and, if so, which type offers the best resistance for the environmental conditions.

FM Approved sprinklers are available with common decorative finishes such as factory-applied bright brass, chrome, paint, or polyester coating. Note that these finishes are for decorative purposes only and are not FM Approved specifically for corrosive environments.

Finishes of currently Approved Storage and Non-Storage sprinklers are included in the following table.

Factory-Applied Finishes of Approved Storage and Non-Storage Sprinklers

Finish	*Description*
Black Plated	*Black Plated*
Brass	*Unfinished, Plain Brass or Bronze*
Bright Brass	*Bright Brass Plated*
Chrome	*Chrome Plated*
Painted	*Painted (any color)*
Polyester	*Polyester Coated (any color)*
Zinc	*Zinc Plated*

Finishes of currently Approved Special Protection (Corrosive Environment) sprinklers are included in the following table. Note that FM Approved Special Protection (Corrosive Environment) sprinklers are also acceptable for use as Non-Storage sprinklers, unless indicated otherwise by the occupancy-specific FM Global data sheet.

Finishes of Approved Special Protection (Corrosive Environment) Sprinklers

Finish	*Description*
Lead	*Lead Coated (for extra corrosion protection in some atmospheres)*
NICOTEF	*Nickel-Teflon Coating (for extra corrosion protection in some atmospheres)*
Stainless Steel	*Stainless Steel Alloy (for extra corrosion protection in some atmospheres)*
Wax	*Wax Coated (for extra corrosion protection in some atmospheres)*
Wax Over Brass	*Wax Over Brass Coated (for extra corrosion protection in some atmospheres)*
Wax Over Lead	*Wax Over Lead Coated (for extra corrosion protection in some atmospheres)*
Wax Over Polyester	*Wax Over Polyester Coated (for extra corrosion protection in some atmospheres)*

© 2007-2018 FM Approvals. All rights reserved.

Only sprinklers supplied by the listed manufacturers are FM Approved. Any change in the device after it leaves the manufacturer voids the Approval.

Note that Approved Special Protection (Corrosive Environment) sprinklers can also be installed in applications acceptable for both Approved Non-Storage and Storage sprinklers having the same K-factor, orientation, RTI, nominal temperature rating and sprinkler spacing.

Non-Storage Sprinklers and Storage Sprinklers

Orientation

Adjustable Concealed Pendent

Adjustable concealed pendent sprinklers incorporate a cover plate which is heat activated and can be manually removed to prevent over-painting of the cover plate. They are intended for use with concealed sprinkler piping where attractive appearance under a ceiling is desired; such occupancies may include offices, hotel lobbies, dining rooms, clubs and similar properties. FM Approved adjustable concealed pendent sprinklers are limited to a maximum temperature rating of 225°F (107°C) and to protection of hazard occupancies as outlined in the occupancy-specific FM Global Property Loss Prevention Data Sheet. They should not be installed in corrosive environments. Unless indicated otherwise by the occupancy-specific FM Global Property Loss Prevention Data Sheet, these sprinklers are FM Approved only for use in wet systems as well as pre-action systems that qualify as a wet system.

Dry Adjustable Horizontal Sidewall

A dry-type sprinkler consists of a sprinkler permanently attached to an extension nipple which has a closure at the inlet end to prevent system water from entering the nipple until the sprinkler operates.

Adjustable dry horizontal sidewall sprinklers are dry-type sprinklers in which the sprinklers attached to the nipple extension are of the horizontal sidewall orientation. They are intended for installation near a wall/ceiling interface and are equipped with a special deflector which discharges most of the water in a horizontal plane so that the water is directed onto adjacent walls as well as the protected area. These types of sprinklers are typically used to protect areas subject to freezing and are connected to water-filled sprinkler piping located adjacent to the protected area in a location not susceptible to freezing. They are also sometimes used on dry type sprinkler systems where the installed sprinkler must be of the sidewall orientation. The sprinklers are generally intended for locations such as offices, hotel lobbies and dining rooms, where the installation of Non-Storage pendent or upright sprinklers with the usual ceiling spacing and pipe location may be objectionable because of appearance. They are also installed for special circumstances where their directional properties are desirable.

Dry Adjustable Pendent

A dry-type sprinkler consists of a sprinkler permanently attached to an extension nipple which has a closure at the inlet end to prevent system water from entering the nipple until the sprinkler operates.

Adjustable dry pendent sprinklers are dry-type sprinklers in which the sprinkler attached to the nipple extension is of the pendent orientation. These types of sprinklers are typically used to protect areas subject to freezing and are connected to water-filled sprinkler piping located above the protected area in a location not susceptible to freezing. They are also sometimes used on dry type sprinkler systems where the installed sprinkler must be of the pendent orientation.

Adjustable Recessed Pendent

Adjustable recessed pendent sprinklers consist of a pendent sprinkler installed in a decorative recessed cup which reduces the protrusion of the sprinkler from the ceiling. They are intended for use with concealed sprinkler piping where attractive appearance under a ceiling is desired; such occupancies may include offices, hotel lobbies, dining rooms, clubs and similar properties. FM Approved adjustable recessed pendent sprinklers are limited to a maximum temperature rating of 225°F (107°C) and to protection of hazard occupancies as outlined in the occupancy-specific FM Global Property Loss Prevention Data Sheet. Unless indicated otherwise by the occupancy-specific FM Global Property Loss Prevention Data Sheet, these sprinklers are FM Approved only for use in wet systems as well as pre-action systems that qualify as a wet system.

Concealed Pendent

Concealed pendent sprinklers incorporate a cover plate which is heat activated and can be manually removed to prevent over-painting of the cover plate. They are intended for use with concealed sprinkler piping where attractive appearance under a ceiling is desired; such occupancies may include offices, hotel lobbies, dining rooms, clubs and similar properties. FM Approved concealed pendent sprinklers are limited to a maximum temperature rating of 225°F (107°C) and to protection of hazard occupancies as outlined in the occupancy-specific FM Global Property Loss Prevention Data Sheet. They should not be installed in corrosive environments. Unless indicated otherwise by the occupancy-specific FM Global Property Loss Prevention Data Sheet, these sprinklers are FM Approved only for use in wet systems as well as pre-action systems that qualify as a wet system.

Dry Concealed Pendent

A dry-type sprinkler consists of a sprinkler permanently attached to an extension nipple which has a closure at the inlet end to prevent system water from entering the nipple until the sprinkler operates.

Dry concealed pendent sprinklers are dry-type sprinklers in which the sprinklers attached to the nipple extension are of the pendent orientation. Dry concealed pendent sprinklers incorporate a cover plate which is heat activated and can be manually removed to prevent over-painting of the cover plate. These types of sprinklers are typically used to protect areas subject to freezing and are connected to water-filled sprinkler piping located adjacent to the protected area in a location not susceptible to freezing. They are also sometimes used on dry type sprinkler systems where the installed sprinkler must be of the pendent orientation. The sprinklers are generally intended for use with concealed sprinkler piping where attractive appearance under a ceiling is desired; such occupancies

© 2007-2018 FM Approvals. All rights reserved.

may include offices, hotel lobbies, dining rooms, clubs and similar properties. They should not be installed in corrosive environments. FM Approved dry concealed pendent sprinklers are limited to a maximum temperature rating of 225°F (107°C) and to protection of hazard occupancies as outlined in the occupancy-specific FM Global Property Loss Prevention Data Sheet.

Dry Horizontal Sidewall

A dry-type sprinkler consists of a sprinkler permanently attached to an extension nipple which has a closure at the inlet end to prevent system water from entering the nipple until the sprinkler operates.

Dry horizontal sidewall sprinklers are dry-type sprinklers in which the sprinklers attached to the nipple extension are of the horizontal sidewall orientation. They are intended for installation near a wall/ceiling interface and are equipped with a special deflector which discharges most of the water in a horizontal plane so that the water is directed onto adjacent walls as well as the protected area. These types of sprinklers are typically used to protect areas subject to freezing and are connected to water-filled sprinkler piping located adjacent to the protected area in a location not susceptible to freezing. They are also sometimes used on dry type sprinkler systems where the installed sprinkler must be of the sidewall orientation. The sprinklers are generally intended for locations such as offices, hotel lobbies and dining rooms, where the installation of Non-Storage pendent or upright sprinklers with the usual ceiling spacing and pipe location may be objectionable because of appearance. They are also installed for special circumstances where their directional properties are desirable.

Dry Pendent

A dry-type sprinkler consists of a sprinkler permanently attached to an extension nipple which has a closure at the inlet end to prevent system water from entering the nipple until the sprinkler operates.

Dry pendent sprinklers are dry-type sprinklers in which the sprinkler attached to the nipple extension is of the pendent orientation. These types of sprinklers are typically used to protect areas subject to freezing and are connected to water-filled sprinkler piping located above the protected area in a location not susceptible to freezing. They are also sometimes used on dry type sprinkler systems where the installed sprinkler must be of the pendent orientation.

Dry Recessed Horizontal Sidewall

A dry-type sprinkler consists of a sprinkler permanently attached to an extension nipple which has a closure at the inlet end to prevent system water from entering the nipple until the sprinkler operates.

Dry recessed horizontal sidewall sprinklers are dry-type sprinklers in which the sprinklers attached to the nipple extension are of the horizontal sidewall orientation and are installed in a decorative recessed cup which reduces the protrusion of the sprinkler from the wall. These types of sprinklers are typically used to protect areas subject to freezing and are connected to water-filled sprinkler piping located adjacent to the protected area in a location not susceptible to freezing. They are also sometimes used on dry type sprinkler systems where the installed sprinkler must be of the sidewall orientation.

Dry Recessed Pendent

A dry-type sprinkler consists of a sprinkler permanently attached to an extension nipple which has a closure at the inlet end to prevent system water from entering the nipple until the sprinkler operates.

Dry recessed pendent sprinklers are dry-type sprinklers in which the sprinklers attached to the nipple extension are of the pendent orientation and are installed in a decorative recessed cup which reduces the protrusion of the sprinkler from the ceiling. These types of sprinklers are typically used to protect areas subject to freezing and are connected to water-filled sprinkler piping located above the protected area in a location not susceptible to freezing. They are also sometimes used on dry type sprinkler systems where the installed sprinkler must be of the pendent orientation.

Dry Upright

A dry-type sprinkler consists of a sprinkler permanently attached to an extension nipple which has a closure at the inlet end to prevent system water from entering the nipple until the sprinkler operates.

Dry upright sprinklers are dry-type sprinklers in which the sprinklers attached to the nipple extension are of the upright orientation. These types of sprinklers are typically used to protect areas subject to freezing and are connected to water-filled sprinkler piping located below the protected area in a location not susceptible to freezing.

Flush Pendent

Flush pendent sprinklers are constructed with an operating element which extends a short distance below the ceiling. Upon actuation, the sprinkler deflector drops below the ceiling level to provide a proper water distribution. They are intended for use with concealed sprinkler piping where attractive appearance under a ceiling is desired; such occupancies may include offices, hotel lobbies, dining rooms, clubs and similar properties. They should not be installed in corrosive environments. FM Approved flush pendent sprinklers are limited to a maximum temperature rating of 225°F (107°C) and to protection of hazard occupancies as outlined in the occupancy-specific FM Global Property Loss Prevention Data Sheet. Unless indicated otherwise by the occupancy-specific FM Global Property Loss Prevention Data Sheet, these sprinklers are FM Approved only for use in wet systems as well as pre-action systems that qualify as a wet system.

Horizontal Sidewall

Sidewall sprinklers are sprinklers that are intended for installation near a wall/ceiling interface. They are equipped with a special deflector which discharges most of the water in a horizontal plane so that the water is directed onto adjacent walls as well as the protected area. The sprinklers are generally intended for locations such as offices, hotel lobbies and dining rooms, where the installation of Non-Storage pendent or upright sprinklers with the usual ceiling spacing and pipe location may be objectionable because of appearance. They are also installed for special circumstances where their directional properties are desirable.

Horizontal sidewall automatic sprinklers are sidewall-type sprinklers in which the axis of the sprinkler orifice is oriented horizontally.

© 2007-2018 FM Approvals. All rights reserved.

Pendent

Pendent automatic sprinklers are sprinklers designed such that the water discharge from the sprinkler orifice is directed downward towards the deflector which in turn directs the water downward toward the protected area. The sprinkler is designed such that the deflector is located below the pipe to which the sprinkler is connected.

Recessed Horizontal Sidewall

Sidewall sprinklers are sprinklers that are intended for installation near a wall/ceiling interface. They are equipped with a special deflector which discharges most of the water in a horizontal plane so that the water is directed onto adjacent walls as well as the protected area. The sprinklers are generally intended for locations such as offices, hotel lobbies and dining rooms, where the installation of Non-Storage pendent or upright sprinklers with the usual ceiling spacing and pipe location may be objectionable because of appearance. They are also installed for special circumstances where their directional properties are desirable.

Recessed horizontal sidewall sprinklers consist of a horizontal sidewall sprinkler installed in a decorative recessed cup which reduces the protrusion of the sprinkler from the wall. They are intended for use with concealed sprinkler piping where attractive appearance is desired; such occupancies may include offices, hotel lobbies, dining rooms, clubs and similar properties.

Recessed Pendent

Recessed pendent sprinklers consist of a pendent sprinkler installed in a decorative recessed cup which reduces the protrusion of the sprinkler from the ceiling. They are intended for use with concealed sprinkler piping where attractive appearance under a ceiling is desired; such occupancies may include offices, hotel lobbies, dining rooms, clubs and similar properties. FM Approved recessed pendent sprinklers are limited to a maximum temperature rating of 225°F (107°C) and to protection of hazard occupancies as outlined in the occupancy-specific FM Global Property Loss Prevention Data Sheet. Unless indicated otherwise by the occupancy-specific FM Global Property Loss Prevention Data Sheet, these sprinklers are FM Approved only for use in wet systems as well as pre-action systems that qualify as a wet system.

Upright

Upright automatic sprinklers are sprinklers designed such that the water discharge from the sprinkler orifice is directed upward towards the deflector which in turn redirects the water downward toward the protected area. The sprinkler is designed such that the deflector is located above the pipe to which the sprinkler is connected.

Vertical Sidewall

Sidewall sprinklers are sprinklers that are intended for installation near a wall/ceiling interface. They are equipped with a special deflector which discharges most of the water in a horizontal plane so that the water is directed onto adjacent walls as well as the protected area. The sprinklers are generally intended for locations such as office, hotel lobbies, and dining rooms, where the installation of Non-Storage pendent or upright sprinklers with the usual ceiling spacing and pipe location may be objectionable because of appearance. They are also installed for special circumstances where their directional properties are desirable.

Vertical sidewall automatic sprinklers are sidewall-type sprinklers in which the axis of the sprinkler orifice is oriented vertically. They are FM Approved for use in both the upright and pendent positions, except where noted otherwise.

Non-Storage Sprinklers

A Non-Storage automatic sprinkler is a sprinkler that has been categorized by FM Global as acceptable for protecting non-storage-type occupancies and/or other occupancy hazards characterized by low to moderate heat-release rate fires as permitted in a FM Global occupancy-specific Property Loss Prevention Data Sheet.

K5.6EC (K80EC metric)

Non-Storage extended coverage (EC) automatic sprinklers with a K-factor of 5.6 (80 metric) are similar to K5.6 (K80 metric) Non-Storage automatic sprinklers except that they can be installed on linear and area spacing values greater than those listed for K5.6 (K80 metric) sprinklers. These extended coverage sprinklers are limited to a maximum nominal temperature rating of 175°F (80°C). See FM Global Property Loss Prevention Data Sheet 2-0, *Installation Guidelines for Automatic Sprinklers*, for the minimum and maximum linear and area spacing guidelines as well as additional details and requirements regarding these sprinklers.

K5.6EC (K80EC metric) Horizontal Sidewall

TY3332

Company Name:	Tyco Fire Products LP
Company Address:	1467 Elmwood Ave, Cranston, Rhode Island 02910, USA
Company Website:	http://tyco-fire.com
New/Updated Product Listing:	No
Primary Class of Work:	2022-AS, EC Type

© 2007-2018 FM Approvals. All rights reserved.

Listing Country:	United States of America
Sprinkler Category:	Non Storage
K:	5.6EC
Type:	Horizontal Sidewall
Response:	QR - Quick Response
Element:	3 mm
NPT (in.):	1/2
Finish:	Brass, Chrome, Polyester
Temp. Rating (°F):	135, 155, 175
Temp. Rating (°C):	57, 68, 79
Certification Type:	FM Approved

© 2007-2018 FM Approvals. All rights reserved.

Non-Storage / Special Protection / Storage Sprinklers

General Information

Automatic sprinkler protection is recommended for industrial and other buildings having combustible construction or combustible occupancies.

When selecting a specific type of sprinkler, refer to the FM Global Property Loss Prevention Data Sheets to ensure that the sprinkler selected is capable of providing adequate fire protection for the intended occupancy. Projects that are specific to FM Global insured clients, working plans of proposed layouts, showing all details with respect to location of sprinklers and piping, description of the occupancy and details of construction, should be sent to the local FM Global engineering office for review and acceptance before the materials are fabricated. The plans will be accepted or changes will be recommended to assure that the work will be done according to the best practice and to avoid the possibility of later requests for changes.

Nominal thread sizes are expressed using American National Standard Taper Pipe Threads (NPT). Sprinklers intended for sale outside the United States shall have threads which are in compliance with other national or international standards as permitted at the sole discretion of FM Approvals.
Unless otherwise noted, automatic sprinklers have a rated working pressure of 175 psi (12.1 bar).

Sprinkler Categories

There are three categories of FM Approved automatic sprinklers: Storage, Non-Storage and Special Protection sprinklers based on the type of occupancy hazard they are intended to protect. Within these three categories are various different types of orientations (such as pendent, upright, horizontal sidewall, vertical sidewall, flush, recessed, concealed, dry pendent, dry upright, etc.), thermal response ratings (i.e. quick response or standard response), nominal temperature ratings (see table below), K-factors (see table below) and spacings (i.e. standard or extended coverage).

Nominal K-Factors of Sprinklers

The sprinkler nominal discharge coefficient (K-factor) is expressed in US customary units of gal/min/(psi)$^{0.5}$. See the table below for nominal K-factor values of currently Approved sprinklers.

Nominal K-Factors of Approved Sprinklers

Nominal K-Factor, gpm/(psi)$^{1/2}$	*Metric K-Factor, lpm/(bar)$^{1/2}$*
2.8	40
5.6	80
8.0	115
11.2	160
14.0	200
16.8	240
19.6	280
22.4	320
25.2	360

The following table provides the nominal K-factor values of currently Approved Special Protection (Residential) sprinklers.

Nominal K-Factors of Approved Special Protection (Residential) Sprinklers

Nominal K-Factor, gpm/(psi)$^{1/2}$	*Metric K-Factor, lpm/(bar)$^{1/2}$*
3.8	55
5.8	85
6.9	100

© 2007-2018 FM Approvals. All rights reserved.

Nominal Temperature Rating of Sprinklers

A sprinkler operates automatically when the heat-actuated element is heated to, or above, its thermal rating. Selection of the proper temperature rating for automatic sprinklers is important as it provides a factor of safety designed to prevent premature operation. See the table below as well as the occupancy-specific FM Global data sheet to ensure the proper nominal temperature rating for the sprinkler is chosen based on the hazard being protected as well as the expected ambient temperature conditions. Factory coated, plated and painted sprinklers rated above 165°F (74°C) have the standard temperature color code either on the frame arms or on the compression screws, except in the case of bulb type decorative coated sprinklers in which the bulb fluid color indicates the temperature rating per the following table:

Nominal Temperature Ratings of Sprinklers Based on Maximum Ambient Temperature at Sprinkler Level

*Nominal Temperature Rating of Sprinkler**	*Maximum Ambient Temperature at Sprinkler Level*	*Temperature Range of Nominal Rating***	*Temperature Classification of Sprinkler*	*Color of Sprinkler Frame*	*Color and Temperature of Sprinkler Glass Bulb*
135°F (55°C)	100°F (38°C)	135°F (57°C)	Ordinary	Unpainted	Orange, 135°F (57°C)
160°F (70°C)	100°F (38°C)	155°F - 165°F (68°C - 74°C)	Ordinary	Unpainted	Red, 155°F (68°C)
175°F (80°C)	150°F (66°C)	175°F (79°C)	Intermediate	White	Yellow, 175°F (79°C)
212°F (100°C)	150°F (66°C)	200°F - 220°F (93°C - 104°C)	Intermediate	White	Green, 200°F & 225°F (93°C & 107°C)
280°F (140°C)	225°F (107°C)	280°F - 286°F (138°C - 141°C)	High	Blue	Blue, 250°F & 286°F (121°C & 141°C)
350°F (175°C)	300°F (149°C)	325°F -375°F (163°C - 191°C)	Extra High	Red	Mauve, 325°F & 360°F (162°C & 182°C)
425°F (220°C)	375°F (191°C)	400°F -475°F (204°C - 246°C)	Very Extra High	Green	Black, 400°F - 650°F (204°C – 343°C)
525°F (275°C)	475°F (246°C)	500°F -575°F (260°C - 302°C)	Ultra High	Orange	Black, 400°F - 650°F (204°C – 343°C)
650°F (345°C)	625°F (329°C)	650°F (343°C)	Ultra High	Orange	Black, 400°F - 650°F (204°C – 343°C)

*The values indicated for nominal temperature ratings of sprinkler in this table are based on values indicated in FM Global data sheets

**The values indicated are based on the actual (marked or marked nominal) temperature ratings of currently Approved sprinklers

Sprinklers of "very extra high" and "ultra high" ratings are primarily used for internal protection of chambers such as ovens and dryers having working temperatures above 300°F (149°C). When the sprinklers are normally heated to the working temperature of the oven or dryer, under fire conditions they will operate fast enough for proper protection. However, when the sprinklers are initially at the same temperature as a cold oven or dryer, operation may be so severely retarded that the oven or dryer is virtually without internal sprinkler protection.

Nominal Response Rating of Sprinklers

© 2007-2018 FM Approvals. All rights reserved.

Approved sprinklers are listed in one of three ways for response ratings: fast response (FR), quick response (QR) or standard response (SR) and are reflective of the response of the entire sprinkler to thermal exposure, not just the thermal sensing element of the sprinkler. Note that fast response (FR) sprinklers are a subset of quick response sprinklers for listing purposes.

The thermal sensing elements of the sprinkler are identified as either Fusible or, in the case of bulb type elements, nominal bulb diameter in millimeters (e.g., 2.5 mm, 3 mm, etc.).

Finishes and Coatings of Sprinklers

Approved sprinklers are also available with factory-applied special coatings for resistance to corrosive environments; such sprinklers are listed under the Special Protection sprinkler category. For corrosion resistance, wax is satisfactory except in extreme atmospheres. Wax has too low a melting point for high temperate rated sprinklers, whereas a bituminous coating affords some protection. A lead coating protects against certain mild corrosive atmospheres. Wax-over-lead provides good sprinkler protection. Corrosion resistant sprinklers such as those manufactured from stainless steel or other corrosion resistant materials currently afford the best available protection. See the FM Global occupancy-specific data sheet to determine when a corrosion resistant sprinkler is needed and, if so, which type offers the best resistance for the environmental conditions.

FM Approved sprinklers are available with common decorative finishes such as factory-applied bright brass, chrome, paint, or polyester coating. Note that these finishes are for decorative purposes only and are not FM Approved specifically for corrosive environments.

Finishes of currently Approved Storage and Non-Storage sprinklers are included in the following table.

Factory-Applied Finishes of Approved Storage and Non-Storage Sprinklers

Finish	*Description*
Black Plated	*Black Plated*
Brass	*Unfinished, Plain Brass or Bronze*
Bright Brass	*Bright Brass Plated*
Chrome	*Chrome Plated*
Painted	*Painted (any color)*
Polyester	*Polyester Coated (any color)*
Zinc	*Zinc Plated*

Finishes of currently Approved Special Protection (Corrosive Environment) sprinklers are included in the following table. Note that FM Approved Special Protection (Corrosive Environment) sprinklers are also acceptable for use as Non-Storage sprinklers, unless indicated otherwise by the occupancy-specific FM Global data sheet.

Finishes of Approved Special Protection (Corrosive Environment) Sprinklers

Finish	*Description*
Lead	*Lead Coated (for extra corrosion protection in some atmospheres)*
NICOTEF	*Nickel-Teflon Coating (for extra corrosion protection in some atmospheres)*
Stainless Steel	*Stainless Steel Alloy (for extra corrosion protection in some atmospheres)*
Wax	*Wax Coated (for extra corrosion protection in some atmospheres)*
Wax Over Brass	*Wax Over Brass Coated (for extra corrosion protection in some atmospheres)*
Wax Over Lead	*Wax Over Lead Coated (for extra corrosion protection in some atmospheres)*
Wax Over Polyester	*Wax Over Polyester Coated (for extra corrosion protection in some atmospheres)*

© 2007-2018 FM Approvals. All rights reserved.

Only sprinklers supplied by the listed manufacturers are FM Approved. Any change in the device after it leaves the manufacturer voids the Approval.

Note that Approved Special Protection (Corrosive Environment) sprinklers can also be installed in applications acceptable for both Approved Non-Storage and Storage sprinklers having the same K-factor, orientation, RTI, nominal temperature rating and sprinkler spacing.

Non-Storage Sprinklers and Storage Sprinklers

Orientation

Adjustable Concealed Pendent

Adjustable concealed pendent sprinklers incorporate a cover plate which is heat activated and can be manually removed to prevent over-painting of the cover plate. They are intended for use with concealed sprinkler piping where attractive appearance under a ceiling is desired; such occupancies may include offices, hotel lobbies, dining rooms, clubs and similar properties. FM Approved adjustable concealed pendent sprinklers are limited to a maximum temperature rating of 225°F (107°C) and to protection of hazard occupancies as outlined in the occupancy-specific FM Global Property Loss Prevention Data Sheet. They should not be installed in corrosive environments. Unless indicated otherwise by the occupancy-specific FM Global Property Loss Prevention Data Sheet, these sprinklers are FM Approved only for use in wet systems as well as pre-action systems that qualify as a wet system.

Dry Adjustable Horizontal Sidewall

A dry-type sprinkler consists of a sprinkler permanently attached to an extension nipple which has a closure at the inlet end to prevent system water from entering the nipple until the sprinkler operates.

Adjustable dry horizontal sidewall sprinklers are dry-type sprinklers in which the sprinklers attached to the nipple extension are of the horizontal sidewall orientation. They are intended for installation near a wall/ceiling interface and are equipped with a special deflector which discharges most of the water in a horizontal plane so that the water is directed onto adjacent walls as well as the protected area. These types of sprinklers are typically used to protect areas subject to freezing and are connected to water-filled sprinkler piping located adjacent to the protected area in a location not susceptible to freezing. They are also sometimes used on dry type sprinkler systems where the installed sprinkler must be of the sidewall orientation. The sprinklers are generally intended for locations such as offices, hotel lobbies and dining rooms, where the installation of Non-Storage pendent or upright sprinklers with the usual ceiling spacing and pipe location may be objectionable because of appearance. They are also installed for special circumstances where their directional properties are desirable.

Dry Adjustable Pendent

A dry-type sprinkler consists of a sprinkler permanently attached to an extension nipple which has a closure at the inlet end to prevent system water from entering the nipple until the sprinkler operates.

Adjustable dry pendent sprinklers are dry-type sprinklers in which the sprinkler attached to the nipple extension is of the pendent orientation. These types of sprinklers are typically used to protect areas subject to freezing and are connected to water-filled sprinkler piping located above the protected area in a location not susceptible to freezing. They are also sometimes used on dry type sprinkler systems where the installed sprinkler must be of the pendent orientation.

Adjustable Recessed Pendent

Adjustable recessed pendent sprinklers consist of a pendent sprinkler installed in a decorative recessed cup which reduces the protrusion of the sprinkler from the ceiling. They are intended for use with concealed sprinkler piping where attractive appearance under a ceiling is desired; such occupancies may include offices, hotel lobbies, dining rooms, clubs and similar properties. FM Approved adjustable recessed pendent sprinklers are limited to a maximum temperature rating of 225°F (107°C) and to protection of hazard occupancies as outlined in the occupancy-specific FM Global Property Loss Prevention Data Sheet. Unless indicated otherwise by the occupancy-specific FM Global Property Loss Prevention Data Sheet, these sprinklers are FM Approved only for use in wet systems as well as pre-action systems that qualify as a wet system.

Concealed Pendent

Concealed pendent sprinklers incorporate a cover plate which is heat activated and can be manually removed to prevent over-painting of the cover plate. They are intended for use with concealed sprinkler piping where attractive appearance under a ceiling is desired; such occupancies may include offices, hotel lobbies, dining rooms, clubs and similar properties. FM Approved concealed pendent sprinklers are limited to a maximum temperature rating of 225°F (107°C) and to protection of hazard occupancies as outlined in the occupancy-specific FM Global Property Loss Prevention Data Sheet. They should not be installed in corrosive environments. Unless indicated otherwise by the occupancy-specific FM Global Property Loss Prevention Data Sheet, these sprinklers are FM Approved only for use in wet systems as well as pre-action systems that qualify as a wet system.

Dry Concealed Pendent

A dry-type sprinkler consists of a sprinkler permanently attached to an extension nipple which has a closure at the inlet end to prevent system water from entering the nipple until the sprinkler operates.

Dry concealed pendent sprinklers are dry-type sprinklers in which the sprinklers attached to the nipple extension are of the pendent orientation. Dry concealed pendent sprinklers incorporate a cover plate which is heat activated and can be manually removed to prevent over-painting of the cover plate. These types of sprinklers are typically used to protect areas subject to freezing and are connected to water-filled sprinkler piping located adjacent to the protected area in a location not susceptible to freezing. They are also sometimes used on dry type sprinkler systems where the installed sprinkler must be of the pendent orientation. The sprinklers are generally intended for use with concealed sprinkler piping where attractive appearance under a ceiling is desired; such occupancies

© 2007-2018 FM Approvals. All rights reserved.

may include offices, hotel lobbies, dining rooms, clubs and similar properties. They should not be installed in corrosive environments. FM Approved dry concealed pendent sprinklers are limited to a maximum temperature rating of 225°F (107°C) and to protection of hazard occupancies as outlined in the occupancy-specific FM Global Property Loss Prevention Data Sheet.

Dry Horizontal Sidewall

A dry-type sprinkler consists of a sprinkler permanently attached to an extension nipple which has a closure at the inlet end to prevent system water from entering the nipple until the sprinkler operates.

Dry horizontal sidewall sprinklers are dry-type sprinklers in which the sprinklers attached to the nipple extension are of the horizontal sidewall orientation. They are intended for installation near a wall/ceiling interface and are equipped with a special deflector which discharges most of the water in a horizontal plane so that the water is directed onto adjacent walls as well as the protected area. These types of sprinklers are typically used to protect areas subject to freezing and are connected to water-filled sprinkler piping located adjacent to the protected area in a location not susceptible to freezing. They are also sometimes used on dry type sprinkler systems where the installed sprinkler must be of the sidewall orientation. The sprinklers are generally intended for locations such as offices, hotel lobbies and dining rooms, where the installation of Non-Storage pendent or upright sprinklers with the usual ceiling spacing and pipe location may be objectionable because of appearance. They are also installed for special circumstances where their directional properties are desirable.

Dry Pendent

A dry-type sprinkler consists of a sprinkler permanently attached to an extension nipple which has a closure at the inlet end to prevent system water from entering the nipple until the sprinkler operates.

Dry pendent sprinklers are dry-type sprinklers in which the sprinkler attached to the nipple extension is of the pendent orientation. These types of sprinklers are typically used to protect areas subject to freezing and are connected to water-filled sprinkler piping located above the protected area in a location not susceptible to freezing. They are also sometimes used on dry type sprinkler systems where the installed sprinkler must be of the pendent orientation.

Dry Recessed Horizontal Sidewall

A dry-type sprinkler consists of a sprinkler permanently attached to an extension nipple which has a closure at the inlet end to prevent system water from entering the nipple until the sprinkler operates.

Dry recessed horizontal sidewall sprinklers are dry-type sprinklers in which the sprinklers attached to the nipple extension are of the horizontal sidewall orientation and are installed in a decorative recessed cup which reduces the protrusion of the sprinkler from the wall. These types of sprinklers are typically used to protect areas subject to freezing and are connected to water-filled sprinkler piping located adjacent to the protected area in a location not susceptible to freezing. They are also sometimes used on dry type sprinkler systems where the installed sprinkler must be of the sidewall orientation.

Dry Recessed Pendent

A dry-type sprinkler consists of a sprinkler permanently attached to an extension nipple which has a closure at the inlet end to prevent system water from entering the nipple until the sprinkler operates.

Dry recessed pendent sprinklers are dry-type sprinklers in which the sprinklers attached to the nipple extension are of the pendent orientation and are installed in a decorative recessed cup which reduces the protrusion of the sprinkler from the ceiling. These types of sprinklers are typically used to protect areas subject to freezing and are connected to water-filled sprinkler piping located above the protected area in a location not susceptible to freezing. They are also sometimes used on dry type sprinkler systems where the installed sprinkler must be of the pendent orientation.

Dry Upright

A dry-type sprinkler consists of a sprinkler permanently attached to an extension nipple which has a closure at the inlet end to prevent system water from entering the nipple until the sprinkler operates.

Dry upright sprinklers are dry-type sprinklers in which the sprinklers attached to the nipple extension are of the upright orientation. These types of sprinklers are typically used to protect areas subject to freezing and are connected to water-filled sprinkler piping located below the protected area in a location not susceptible to freezing.

Flush Pendent

Flush pendent sprinklers are constructed with an operating element which extends a short distance below the ceiling. Upon actuation, the sprinkler deflector drops below the ceiling level to provide a proper water distribution. They are intended for use with concealed sprinkler piping where attractive appearance under a ceiling is desired; such occupancies may include offices, hotel lobbies, dining rooms, clubs and similar properties. They should not be installed in corrosive environments. FM Approved flush pendent sprinklers are limited to a maximum temperature rating of 225°F (107°C) and to protection of hazard occupancies as outlined in the occupancy-specific FM Global Property Loss Prevention Data Sheet. Unless indicated otherwise by the occupancy-specific FM Global Property Loss Prevention Data Sheet, these sprinklers are FM Approved only for use in wet systems as well as pre-action systems that qualify as a wet system.

Horizontal Sidewall

Sidewall sprinklers are sprinklers that are intended for installation near a wall/ceiling interface. They are equipped with a special deflector which discharges most of the water in a horizontal plane so that the water is directed onto adjacent walls as well as the protected area. The sprinklers are generally intended for locations such as offices, hotel lobbies and dining rooms, where the installation of Non-Storage pendent or upright sprinklers with the usual ceiling spacing and pipe location may be objectionable because of appearance. They are also installed for special circumstances where their directional properties are desirable.

Horizontal sidewall automatic sprinklers are sidewall-type sprinklers in which the axis of the sprinkler orifice is oriented horizontally.

© 2007-2018 FM Approvals. All rights reserved.

Pendent

Pendent automatic sprinklers are sprinklers designed such that the water discharge from the sprinkler orifice is directed downward towards the deflector which in turn directs the water downward toward the protected area. The sprinkler is designed such that the deflector is located below the pipe to which the sprinkler is connected.

Recessed Horizontal Sidewall

Sidewall sprinklers are sprinklers that are intended for installation near a wall/ceiling interface. They are equipped with a special deflector which discharges most of the water in a horizontal plane so that the water is directed onto adjacent walls as well as the protected area. The sprinklers are generally intended for locations such as offices, hotel lobbies and dining rooms, where the installation of Non-Storage pendent or upright sprinklers with the usual ceiling spacing and pipe location may be objectionable because of appearance. They are also installed for special circumstances where their directional properties are desirable.

Recessed horizontal sidewall sprinklers consist of a horizontal sidewall sprinkler installed in a decorative recessed cup which reduces the protrusion of the sprinkler from the wall. They are intended for use with concealed sprinkler piping where attractive appearance is desired; such occupancies may include offices, hotel lobbies, dining rooms, clubs and similar properties.

Recessed Pendent

Recessed pendent sprinklers consist of a pendent sprinkler installed in a decorative recessed cup which reduces the protrusion of the sprinkler from the ceiling. They are intended for use with concealed sprinkler piping where attractive appearance under a ceiling is desired; such occupancies may include offices, hotel lobbies, dining rooms, clubs and similar properties. FM Approved recessed pendent sprinklers are limited to a maximum temperature rating of 225°F (107°C) and to protection of hazard occupancies as outlined in the occupancy-specific FM Global Property Loss Prevention Data Sheet. Unless indicated otherwise by the occupancy-specific FM Global Property Loss Prevention Data Sheet, these sprinklers are FM Approved only for use in wet systems as well as pre-action systems that qualify as a wet system.

Upright

Upright automatic sprinklers are sprinklers designed such that the water discharge from the sprinkler orifice is directed upward towards the deflector which in turn redirects the water downward toward the protected area. The sprinkler is designed such that the deflector is located above the pipe to which the sprinkler is connected.

Vertical Sidewall

Sidewall sprinklers are sprinklers that are intended for installation near a wall/ceiling interface. They are equipped with a special deflector which discharges most of the water in a horizontal plane so that the water is directed onto adjacent walls as well as the protected area. The sprinklers are generally intended for locations such as office, hotel lobbies, and dining rooms, where the installation of Non-Storage pendent or upright sprinklers with the usual ceiling spacing and pipe location may be objectionable because of appearance. They are also installed for special circumstances where their directional properties are desirable.

Vertical sidewall automatic sprinklers are sidewall-type sprinklers in which the axis of the sprinkler orifice is oriented vertically. They are FM Approved for use in both the upright and pendent positions, except where noted otherwise.

Non-Storage Sprinklers

A Non-Storage automatic sprinkler is a sprinkler that has been categorized by FM Global as acceptable for protecting non-storage-type occupancies and/or other occupancy hazards characterized by low to moderate heat-release rate fires as permitted in a FM Global occupancy-specific Property Loss Prevention Data Sheet.

K5.6 (K80 metric)

Non-Storage automatic sprinklers having a K-factor value of 5.6 (80 metric) are similar to Non-Storage automatic sprinklers having a K-factor value of 2.8 (40 metric), except that they discharge 100% more water at the same discharge pressure and typically do not require the use of individual or system strainers. Pendent sprinklers of this K-factor would, however, require the installation of a return bend if the water supply is fed from an open-body type source. See FM Global Property Loss Prevention Data Sheet 2-0, *Installation Guidelines for Automatic Sprinklers*, for additional details and requirements regarding these sprinklers.

K5.6 (K80 metric) Pendent

TY323

Company Name:	Tyco Fire Products LP
Company Address:	1467 Elmwood Ave, Cranston, Rhode Island 02910, USA
Company Website:	http://tyco-fire.com
New/Updated Product Listing:	No
Primary Class of Work:	2017-AS, Control Mode, Pendent

© 2007-2018 FM Approvals. All rights reserved.

Listing Country:	United States of America
Sprinkler Category:	Non Storage
K:	5.6
Type:	Pendent
Response:	QR - Quick Response
Element:	3 mm
NPT (in.):	1/2
Finish:	Brass, Chrome, Polyester
Temp. Rating (°F):	135, 155, 175, 200, 286
Temp. Rating (°C):	57, 68, 79, 93, 141
Certification Type:	FM Approved

© 2007-2018 FM Approvals. All rights reserved.

Non-Storage / Special Protection / Storage Sprinklers

General Information

Automatic sprinkler protection is recommended for industrial and other buildings having combustible construction or combustible occupancies.

When selecting a specific type of sprinkler, refer to the FM Global Property Loss Prevention Data Sheets to ensure that the sprinkler selected is capable of providing adequate fire protection for the intended occupancy. Projects that are specific to FM Global insured clients, working plans of proposed layouts, showing all details with respect to location of sprinklers and piping, description of the occupancy and details of construction, should be sent to the local FM Global engineering office for review and acceptance before the materials are fabricated. The plans will be accepted or changes will be recommended to assure that the work will be done according to the best practice and to avoid the possibility of later requests for changes.

Nominal thread sizes are expressed using American National Standard Taper Pipe Threads (NPT). Sprinklers intended for sale outside the United States shall have threads which are in compliance with other national or international standards as permitted at the sole discretion of FM Approvals.
Unless otherwise noted, automatic sprinklers have a rated working pressure of 175 psi (12.1 bar).

Sprinkler Categories

There are three categories of FM Approved automatic sprinklers: Storage, Non-Storage and Special Protection sprinklers based on the type of occupancy hazard they are intended to protect. Within these three categories are various different types of orientations (such as pendent, upright, horizontal sidewall, vertical sidewall, flush, recessed, concealed, dry pendent, dry upright, etc.), thermal response ratings (i.e. quick response or standard response), nominal temperature ratings (see table below), K-factors (see table below) and spacings (i.e. standard or extended coverage).

Nominal K-Factors of Sprinklers

The sprinkler nominal discharge coefficient (K-factor) is expressed in US customary units of gal/min/(psi)$^{0.5}$. See the table below for nominal K-factor values of currently Approved sprinklers.

Nominal K-Factors of Approved Sprinklers

Nominal K-Factor, gpm/(psi)$^{1/2}$	*Metric K-Factor, lpm/(bar)$^{1/2}$*
2.8	40
5.6	80
8.0	115
11.2	160
14.0	200
16.8	240
19.6	280
22.4	320
25.2	360

The following table provides the nominal K-factor values of currently Approved Special Protection (Residential) sprinklers.

Nominal K-Factors of Approved Special Protection (Residential) Sprinklers

Nominal K-Factor, gpm/(psi)$^{1/2}$	*Metric K-Factor, lpm/(bar)$^{1/2}$*
3.8	55
5.8	85
6.9	100

© 2007-2018 FM Approvals. All rights reserved.

Nominal Temperature Rating of Sprinklers

A sprinkler operates automatically when the heat-actuated element is heated to, or above, its thermal rating. Selection of the proper temperature rating for automatic sprinklers is important as it provides a factor of safety designed to prevent premature operation. See the table below as well as the occupancy-specific FM Global data sheet to ensure the proper nominal temperature rating for the sprinkler is chosen based on the hazard being protected as well as the expected ambient temperature conditions. Factory coated, plated and painted sprinklers rated above 165°F (74°C) have the standard temperature color code either on the frame arms or on the compression screws, except in the case of bulb type decorative coated sprinklers in which the bulb fluid color indicates the temperature rating per the following table:

Nominal Temperature Ratings of Sprinklers Based on Maximum Ambient Temperature at Sprinkler Level

*Nominal Temperature Rating of Sprinkler**	*Maximum Ambient Temperature at Sprinkler Level*	*Temperature Range of Nominal Rating***	*Temperature Classification of Sprinkler*	*Color of Sprinkler Frame*	*Color and Temperature of Sprinkler Glass Bulb*
135°F (55°C)	100°F (38°C)	135°F (57°C)	Ordinary	Unpainted	Orange, 135°F (57°C)
160°F (70°C)	100°F (38°C)	155°F - 165°F (68°C - 74°C)	Ordinary	Unpainted	Red, 155°F (68°C)
175°F (80°C)	150°F (66°C)	175°F (79°C)	Intermediate	White	Yellow, 175°F (79°C)
212°F (100°C)	150°F (66°C)	200°F - 220°F (93°C - 104°C)	Intermediate	White	Green, 200°F & 225°F (93°C & 107°C)
280°F (140°C)	225°F (107°C)	280°F - 286°F (138°C - 141°C)	High	Blue	Blue, 250°F & 286°F (121°C & 141°C)
350°F (175°C)	300°F (149°C)	325°F -375°F (163°C - 191°C)	Extra High	Red	Mauve, 325°F & 360°F (162°C & 182°C)
425°F (220°C)	375°F (191°C)	400°F -475°F (204°C - 246°C)	Very Extra High	Green	Black, 400°F - 650°F (204°C – 343°C)
525°F (275°C)	475°F (246°C)	500°F -575°F (260°C - 302°C)	Ultra High	Orange	Black, 400°F - 650°F (204°C – 343°C)
650°F (345°C)	625°F (329°C)	650°F (343°C)	Ultra High	Orange	Black, 400°F - 650°F (204°C – 343°C)

*The values indicated for nominal temperature ratings of sprinkler in this table are based on values indicated in FM Global data sheets

**The values indicated are based on the actual (marked or marked nominal) temperature ratings of currently Approved sprinklers

Sprinklers of "very extra high" and "ultra high" ratings are primarily used for internal protection of chambers such as ovens and dryers having working temperatures above 300°F (149°C). When the sprinklers are normally heated to the working temperature of the oven or dryer, under fire conditions they will operate fast enough for proper protection. However, when the sprinklers are initially at the same temperature as a cold oven or dryer, operation may be so severely retarded that the oven or dryer is virtually without internal sprinkler protection.

Nominal Response Rating of Sprinklers

© 2007-2018 FM Approvals. All rights reserved.

Approved sprinklers are listed in one of three ways for response ratings: fast response (FR), quick response (QR) or standard response (SR) and are reflective of the response of the entire sprinkler to thermal exposure, not just the thermal sensing element of the sprinkler. Note that fast response (FR) sprinklers are a subset of quick response sprinklers for listing purposes.

The thermal sensing elements of the sprinkler are identified as either Fusible or, in the case of bulb type elements, nominal bulb diameter in millimeters (e.g., 2.5 mm, 3 mm, etc.).

Finishes and Coatings of Sprinklers

Approved sprinklers are also available with factory-applied special coatings for resistance to corrosive environments; such sprinklers are listed under the Special Protection sprinkler category. For corrosion resistance, wax is satisfactory except in extreme atmospheres. Wax has too low a melting point for high temperate rated sprinklers, whereas a bituminous coating affords some protection. A lead coating protects against certain mild corrosive atmospheres. Wax-over-lead provides good sprinkler protection. Corrosion resistant sprinklers such as those manufactured from stainless steel or other corrosion resistant materials currently afford the best available protection. See the FM Global occupancy-specific data sheet to determine when a corrosion resistant sprinkler is needed and, if so, which type offers the best resistance for the environmental conditions.

FM Approved sprinklers are available with common decorative finishes such as factory-applied bright brass, chrome, paint, or polyester coating. Note that these finishes are for decorative purposes only and are not FM Approved specifically for corrosive environments.

Finishes of currently Approved Storage and Non-Storage sprinklers are included in the following table.

Factory-Applied Finishes of Approved Storage and Non-Storage Sprinklers

Finish	*Description*
Black Plated	*Black Plated*
Brass	*Unfinished, Plain Brass or Bronze*
Bright Brass	*Bright Brass Plated*
Chrome	*Chrome Plated*
Painted	*Painted (any color)*
Polyester	*Polyester Coated (any color)*
Zinc	*Zinc Plated*

Finishes of currently Approved Special Protection (Corrosive Environment) sprinklers are included in the following table. Note that FM Approved Special Protection (Corrosive Environment) sprinklers are also acceptable for use as Non-Storage sprinklers, unless indicated otherwise by the occupancy-specific FM Global data sheet.

Finishes of Approved Special Protection (Corrosive Environment) Sprinklers

Finish	*Description*
Lead	*Lead Coated (for extra corrosion protection in some atmospheres)*
NICOTEF	*Nickel-Teflon Coating (for extra corrosion protection in some atmospheres)*
Stainless Steel	*Stainless Steel Alloy (for extra corrosion protection in some atmospheres)*
Wax	*Wax Coated (for extra corrosion protection in some atmospheres)*
Wax Over Brass	*Wax Over Brass Coated (for extra corrosion protection in some atmospheres)*
Wax Over Lead	*Wax Over Lead Coated (for extra corrosion protection in some atmospheres)*
Wax Over Polyester	*Wax Over Polyester Coated (for extra corrosion protection in some atmospheres)*

© 2007-2018 FM Approvals. All rights reserved.

Only sprinklers supplied by the listed manufacturers are FM Approved. Any change in the device after it leaves the manufacturer voids the Approval.

Note that Approved Special Protection (Corrosive Environment) sprinklers can also be installed in applications acceptable for both Approved Non-Storage and Storage sprinklers having the same K-factor, orientation, RTI, nominal temperature rating and sprinkler spacing.

Non-Storage Sprinklers and Storage Sprinklers

Orientation

Adjustable Concealed Pendent

Adjustable concealed pendent sprinklers incorporate a cover plate which is heat activated and can be manually removed to prevent over-painting of the cover plate. They are intended for use with concealed sprinkler piping where attractive appearance under a ceiling is desired; such occupancies may include offices, hotel lobbies, dining rooms, clubs and similar properties. FM Approved adjustable concealed pendent sprinklers are limited to a maximum temperature rating of 225°F (107°C) and to protection of hazard occupancies as outlined in the occupancy-specific FM Global Property Loss Prevention Data Sheet. They should not be installed in corrosive environments. Unless indicated otherwise by the occupancy-specific FM Global Property Loss Prevention Data Sheet, these sprinklers are FM Approved only for use in wet systems as well as pre-action systems that qualify as a wet system.

Dry Adjustable Horizontal Sidewall

A dry-type sprinkler consists of a sprinkler permanently attached to an extension nipple which has a closure at the inlet end to prevent system water from entering the nipple until the sprinkler operates.

Adjustable dry horizontal sidewall sprinklers are dry-type sprinklers in which the sprinklers attached to the nipple extension are of the horizontal sidewall orientation. They are intended for installation near a wall/ceiling interface and are equipped with a special deflector which discharges most of the water in a horizontal plane so that the water is directed onto adjacent walls as well as the protected area. These types of sprinklers are typically used to protect areas subject to freezing and are connected to water-filled sprinkler piping located adjacent to the protected area in a location not susceptible to freezing. They are also sometimes used on dry type sprinkler systems where the installed sprinkler must be of the sidewall orientation. The sprinklers are generally intended for locations such as offices, hotel lobbies and dining rooms, where the installation of Non-Storage pendent or upright sprinklers with the usual ceiling spacing and pipe location may be objectionable because of appearance. They are also installed for special circumstances where their directional properties are desirable.

Dry Adjustable Pendent

A dry-type sprinkler consists of a sprinkler permanently attached to an extension nipple which has a closure at the inlet end to prevent system water from entering the nipple until the sprinkler operates.

Adjustable dry pendent sprinklers are dry-type sprinklers in which the sprinkler attached to the nipple extension is of the pendent orientation. These types of sprinklers are typically used to protect areas subject to freezing and are connected to water-filled sprinkler piping located above the protected area in a location not susceptible to freezing. They are also sometimes used on dry type sprinkler systems where the installed sprinkler must be of the pendent orientation.

Adjustable Recessed Pendent

Adjustable recessed pendent sprinklers consist of a pendent sprinkler installed in a decorative recessed cup which reduces the protrusion of the sprinkler from the ceiling. They are intended for use with concealed sprinkler piping where attractive appearance under a ceiling is desired; such occupancies may include offices, hotel lobbies, dining rooms, clubs and similar properties. FM Approved adjustable recessed pendent sprinklers are limited to a maximum temperature rating of 225°F (107°C) and to protection of hazard occupancies as outlined in the occupancy-specific FM Global Property Loss Prevention Data Sheet. Unless indicated otherwise by the occupancy-specific FM Global Property Loss Prevention Data Sheet, these sprinklers are FM Approved only for use in wet systems as well as pre-action systems that qualify as a wet system.

Concealed Pendent

Concealed pendent sprinklers incorporate a cover plate which is heat activated and can be manually removed to prevent over-painting of the cover plate. They are intended for use with concealed sprinkler piping where attractive appearance under a ceiling is desired; such occupancies may include offices, hotel lobbies, dining rooms, clubs and similar properties. FM Approved concealed pendent sprinklers are limited to a maximum temperature rating of 225°F (107°C) and to protection of hazard occupancies as outlined in the occupancy-specific FM Global Property Loss Prevention Data Sheet. They should not be installed in corrosive environments. Unless indicated otherwise by the occupancy-specific FM Global Property Loss Prevention Data Sheet, these sprinklers are FM Approved only for use in wet systems as well as pre-action systems that qualify as a wet system.

Dry Concealed Pendent

A dry-type sprinkler consists of a sprinkler permanently attached to an extension nipple which has a closure at the inlet end to prevent system water from entering the nipple until the sprinkler operates.

Dry concealed pendent sprinklers are dry-type sprinklers in which the sprinklers attached to the nipple extension are of the pendent orientation. Dry concealed pendent sprinklers incorporate a cover plate which is heat activated and can be manually removed to prevent over-painting of the cover plate. These types of sprinklers are typically used to protect areas subject to freezing and are connected to water-filled sprinkler piping located adjacent to the protected area in a location not susceptible to freezing. They are also sometimes used on dry type sprinkler systems where the installed sprinkler must be of the pendent orientation. The sprinklers are generally intended for use with concealed sprinkler piping where attractive appearance under a ceiling is desired; such occupancies

© 2007-2018 FM Approvals. All rights reserved.

may include offices, hotel lobbies, dining rooms, clubs and similar properties. They should not be installed in corrosive environments. FM Approved dry concealed pendent sprinklers are limited to a maximum temperature rating of 225°F (107°C) and to protection of hazard occupancies as outlined in the occupancy-specific FM Global Property Loss Prevention Data Sheet.

Dry Horizontal Sidewall

A dry-type sprinkler consists of a sprinkler permanently attached to an extension nipple which has a closure at the inlet end to prevent system water from entering the nipple until the sprinkler operates.

Dry horizontal sidewall sprinklers are dry-type sprinklers in which the sprinklers attached to the nipple extension are of the horizontal sidewall orientation. They are intended for installation near a wall/ceiling interface and are equipped with a special deflector which discharges most of the water in a horizontal plane so that the water is directed onto adjacent walls as well as the protected area. These types of sprinklers are typically used to protect areas subject to freezing and are connected to water-filled sprinkler piping located adjacent to the protected area in a location not susceptible to freezing. They are also sometimes used on dry type sprinkler systems where the installed sprinkler must be of the sidewall orientation. The sprinklers are generally intended for locations such as offices, hotel lobbies and dining rooms, where the installation of Non-Storage pendent or upright sprinklers with the usual ceiling spacing and pipe location may be objectionable because of appearance. They are also installed for special circumstances where their directional properties are desirable.

Dry Pendent

A dry-type sprinkler consists of a sprinkler permanently attached to an extension nipple which has a closure at the inlet end to prevent system water from entering the nipple until the sprinkler operates.

Dry pendent sprinklers are dry-type sprinklers in which the sprinkler attached to the nipple extension is of the pendent orientation. These types of sprinklers are typically used to protect areas subject to freezing and are connected to water-filled sprinkler piping located above the protected area in a location not susceptible to freezing. They are also sometimes used on dry type sprinkler systems where the installed sprinkler must be of the pendent orientation.

Dry Recessed Horizontal Sidewall

A dry-type sprinkler consists of a sprinkler permanently attached to an extension nipple which has a closure at the inlet end to prevent system water from entering the nipple until the sprinkler operates.

Dry recessed horizontal sidewall sprinklers are dry-type sprinklers in which the sprinklers attached to the nipple extension are of the horizontal sidewall orientation and are installed in a decorative recessed cup which reduces the protrusion of the sprinkler from the wall. These types of sprinklers are typically used to protect areas subject to freezing and are connected to water-filled sprinkler piping located adjacent to the protected area in a location not susceptible to freezing. They are also sometimes used on dry type sprinkler systems where the installed sprinkler must be of the sidewall orientation.

Dry Recessed Pendent

A dry-type sprinkler consists of a sprinkler permanently attached to an extension nipple which has a closure at the inlet end to prevent system water from entering the nipple until the sprinkler operates.

Dry recessed pendent sprinklers are dry-type sprinklers in which the sprinklers attached to the nipple extension are of the pendent orientation and are installed in a decorative recessed cup which reduces the protrusion of the sprinkler from the ceiling. These types of sprinklers are typically used to protect areas subject to freezing and are connected to water-filled sprinkler piping located above the protected area in a location not susceptible to freezing. They are also sometimes used on dry type sprinkler systems where the installed sprinkler must be of the pendent orientation.

Dry Upright

A dry-type sprinkler consists of a sprinkler permanently attached to an extension nipple which has a closure at the inlet end to prevent system water from entering the nipple until the sprinkler operates.

Dry upright sprinklers are dry-type sprinklers in which the sprinklers attached to the nipple extension are of the upright orientation. These types of sprinklers are typically used to protect areas subject to freezing and are connected to water-filled sprinkler piping located below the protected area in a location not susceptible to freezing.

Flush Pendent

Flush pendent sprinklers are constructed with an operating element which extends a short distance below the ceiling. Upon actuation, the sprinkler deflector drops below the ceiling level to provide a proper water distribution. They are intended for use with concealed sprinkler piping where attractive appearance under a ceiling is desired; such occupancies may include offices, hotel lobbies, dining rooms, clubs and similar properties. They should not be installed in corrosive environments. FM Approved flush pendent sprinklers are limited to a maximum temperature rating of 225°F (107°C) and to protection of hazard occupancies as outlined in the occupancy-specific FM Global Property Loss Prevention Data Sheet. Unless indicated otherwise by the occupancy-specific FM Global Property Loss Prevention Data Sheet, these sprinklers are FM Approved only for use in wet systems as well as pre-action systems that qualify as a wet system.

Horizontal Sidewall

Sidewall sprinklers are sprinklers that are intended for installation near a wall/ceiling interface. They are equipped with a special deflector which discharges most of the water in a horizontal plane so that the water is directed onto adjacent walls as well as the protected area. The sprinklers are generally intended for locations such as offices, hotel lobbies and dining rooms, where the installation of Non-Storage pendent or upright sprinklers with the usual ceiling spacing and pipe location may be objectionable because of appearance. They are also installed for special circumstances where their directional properties are desirable.

Horizontal sidewall automatic sprinklers are sidewall-type sprinklers in which the axis of the sprinkler orifice is oriented horizontally.

© 2007-2018 FM Approvals. All rights reserved.

Pendent

Pendent automatic sprinklers are sprinklers designed such that the water discharge from the sprinkler orifice is directed downward towards the deflector which in turn directs the water downward toward the protected area. The sprinkler is designed such that the deflector is located below the pipe to which the sprinkler is connected.

Recessed Horizontal Sidewall

Sidewall sprinklers are sprinklers that are intended for installation near a wall/ceiling interface. They are equipped with a special deflector which discharges most of the water in a horizontal plane so that the water is directed onto adjacent walls as well as the protected area. The sprinklers are generally intended for locations such as offices, hotel lobbies and dining rooms, where the installation of Non-Storage pendent or upright sprinklers with the usual ceiling spacing and pipe location may be objectionable because of appearance. They are also installed for special circumstances where their directional properties are desirable.

Recessed horizontal sidewall sprinklers consist of a horizontal sidewall sprinkler installed in a decorative recessed cup which reduces the protrusion of the sprinkler from the wall. They are intended for use with concealed sprinkler piping where attractive appearance is desired; such occupancies may include offices, hotel lobbies, dining rooms, clubs and similar properties.

Recessed Pendent

Recessed pendent sprinklers consist of a pendent sprinkler installed in a decorative recessed cup which reduces the protrusion of the sprinkler from the ceiling. They are intended for use with concealed sprinkler piping where attractive appearance under a ceiling is desired; such occupancies may include offices, hotel lobbies, dining rooms, clubs and similar properties. FM Approved recessed pendent sprinklers are limited to a maximum temperature rating of 225°F (107°C) and to protection of hazard occupancies as outlined in the occupancy-specific FM Global Property Loss Prevention Data Sheet. Unless indicated otherwise by the occupancy-specific FM Global Property Loss Prevention Data Sheet, these sprinklers are FM Approved only for use in wet systems as well as pre-action systems that qualify as a wet system.

Upright

Upright automatic sprinklers are sprinklers designed such that the water discharge from the sprinkler orifice is directed upward towards the deflector which in turn redirects the water downward toward the protected area. The sprinkler is designed such that the deflector is located above the pipe to which the sprinkler is connected.

Vertical Sidewall

Sidewall sprinklers are sprinklers that are intended for installation near a wall/ceiling interface. They are equipped with a special deflector which discharges most of the water in a horizontal plane so that the water is directed onto adjacent walls as well as the protected area. The sprinklers are generally intended for locations such as office, hotel lobbies, and dining rooms, where the installation of Non-Storage pendent or upright sprinklers with the usual ceiling spacing and pipe location may be objectionable because of appearance. They are also installed for special circumstances where their directional properties are desirable.

Vertical sidewall automatic sprinklers are sidewall-type sprinklers in which the axis of the sprinkler orifice is oriented vertically. They are FM Approved for use in both the upright and pendent positions, except where noted otherwise.

Non-Storage Sprinklers

A Non-Storage automatic sprinkler is a sprinkler that has been categorized by FM Global as acceptable for protecting non-storage-type occupancies and/or other occupancy hazards characterized by low to moderate heat-release rate fires as permitted in a FM Global occupancy-specific Property Loss Prevention Data Sheet.

K5.6 (K80 metric)

Non-Storage automatic sprinklers having a K-factor value of 5.6 (80 metric) are similar to Non-Storage automatic sprinklers having a K-factor value of 2.8 (40 metric), except that they discharge 100% more water at the same discharge pressure and typically do not require the use of individual or system strainers. Pendent sprinklers of this K-factor would, however, require the installation of a return bend if the water supply is fed from an open-body type source. See FM Global Property Loss Prevention Data Sheet 2-0, *Installation Guidelines for Automatic Sprinklers*, for additional details and requirements regarding these sprinklers.

K5.6 (K80 metric) Upright

TY315

Company Name:	Tyco Fire Products LP
Company Address:	1467 Elmwood Ave, Cranston, Rhode Island 02910, USA
Company Website:	http://tyco-fire.com
New/Updated Product Listing:	No
Primary Class of Work:	2016-AS, Control Mode, Upright

© 2007-2018 FM Approvals. All rights reserved.

Listing Country:	United States of America
Sprinkler Category:	Non Storage
K:	5.6
Type:	Upright
Response:	SR - Standard Response
Element:	5 mm
NPT (in.):	1/2
Finish:	Brass, Chrome, Polyester
Temp. Rating (°F):	135, 155, 175, 200, 286
Temp. Rating (°C):	57, 68, 79, 93, 141
Certification Type:	FM Approved

© 2007-2018 FM Approvals. All rights reserved.